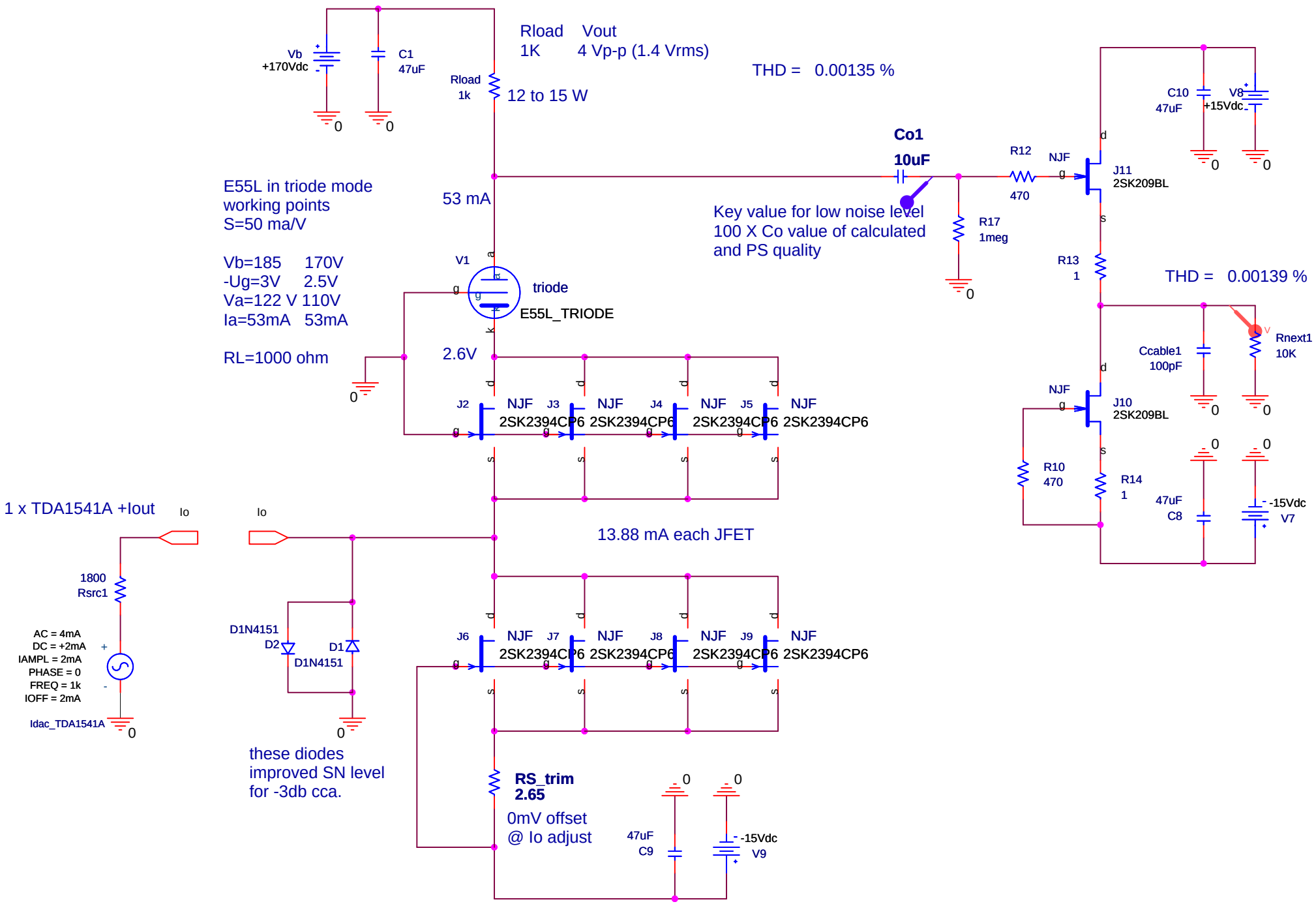
Vb
+170Vdc
C1
47uF
Rload
1k
12 to 15 W
Rload Vout
1K 4 Vp-p (1.4 Vrms)
THD = 0.00135 %
Co1
10uF
R12
470
NJF
J11
2SK209BL
C10
47uF
V8
+15Vdc
R17
1meg
Key value for low noise level
100 X Co value of calculated
and PS quality
E55L in triode mode
working points
S=50 ma/V
53 mA
Vb=185 170V
-Ug=3V 2.5V
Va=122 V 110V
Ia=53mA 53mA
RL=1000 ohm
V1
triode
E55L_TRIODE
2.6V
R13
1
THD = 0.00139 %
Rnext1
10K
Ccable1
100pF
J10
2SK209BL
R10
470
R14
1
47uF
C8
-15Vdc
V7
J2 J3 J4 J5
NJF
2SK2394CP6
13.88 mA each JFET
1 x TDA1541A +Iout
Io
1800
Rsrc1
AC = 4mA
DC = +2mA
IAMPL = 2mA
PHASE = 0
FREQ = 1k
IOFF = 2mA
Idac_TDA1541A
D1N4151
D2
D1
J6 J7 J8 J9
these diodes
improved SN level
for -3db cca.
RS_trim
2.65
0mV offset
@ Io adjust
47uF
C9
-15Vdc
V9