MODEL SEA-20

S.E.A. GRAPHIC EQUALIZER

Specifications

Dimensions	:	4"(H) x 15-3/8"(W) x 10-1/2"(D) (10.0 cm x 39.0 cm x 26.7 cm)
Weight (Net)	:	7.5 lbs. (3.4 kg)
Output Voltage	:	4.0 V S.E.A. max.
Output Impedance	:	S.E.A. OUT 5 kΩ TAPE REC. OUT 5 kΩ
Frequency Response	:	20 Hz ~ 50 kHz ($^{+0}_{-1.5}$ dB)
Total Harmonic Distortion	:	0.06 %, 3 V output, S.E.A. flat
Signal to Noise Ratio	:	- 70 dB
Input Impedance	:	S.E.A. IN 100 kΩ TAPE PLAY 100 kΩ
S.E.A. Center Frequency	:	60 Hz, 150 Hz, 400 Hz, 1 kHz, 2.4 kHz, 6 kHz, 15 kHz
S.E.A. Control Range	:	± 12 dB
Power Source	:	120 V, 60 Hz (J), (C) Type 110, 120, 220, 240 V, 50/60 Hz (E), (A), (BS), (U), (P) Type
Power Consumption	:	9 W (J), (C) Type 10 W (E), (A), (BS), (U), (P) Type

www.hifiengine.com

10. SEA-20 Schematic Diagram

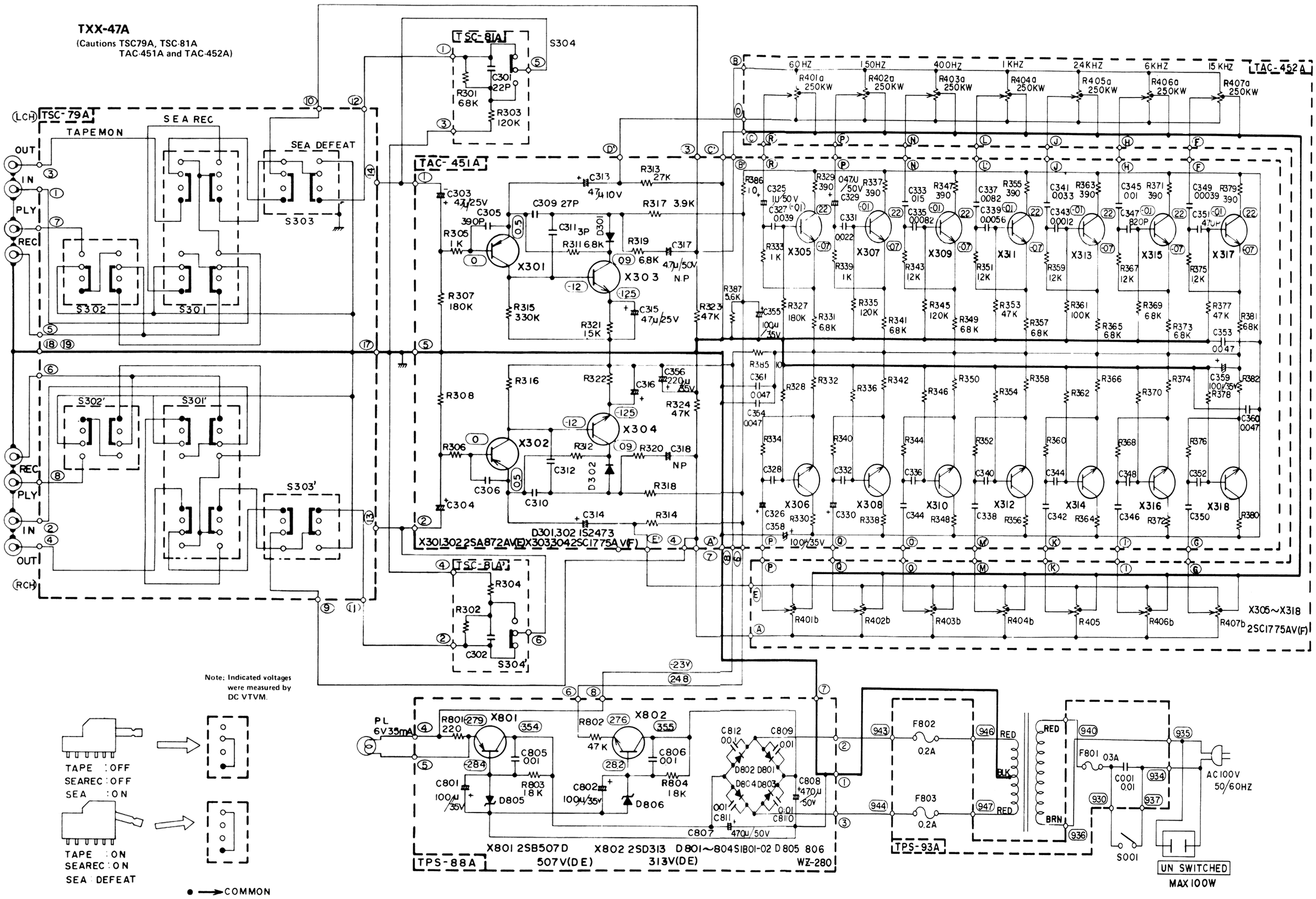

Printed Circuit Board Ass'y Locations

P.C. Board Ass'y	Description	Page
TXX-47A	S.E.A. (Sound Effect Amplifier) P.C. Board Ass'y	6
TPS-88A	Power Supply P.C. Board Ass'y	11
TPS-93	AC Fuse P.C. Board Ass'y	13

Transistor, IC and Diode Lead Identification

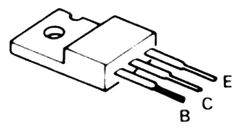

2SD313V (D,E)
2SB507V (D,E)

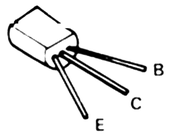

2SC1775AV (F)
2SA872AV (E)

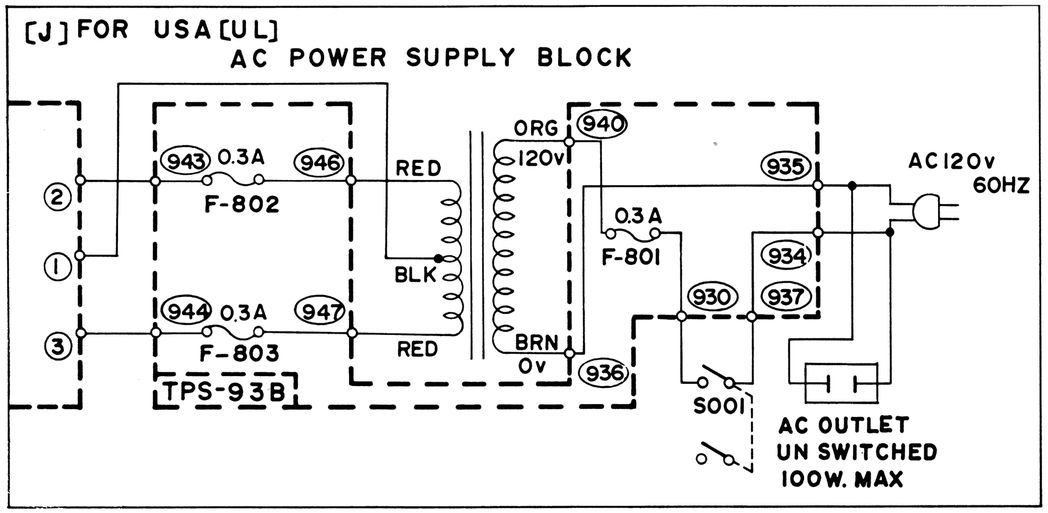
[J] FOR USA [UL]
AC POWER SUPPLY BLOCK
943 0.3A 946
F-802
944 0.3A 947
F-803
TPS-93B
RED
BLK
RED
ORG
120v
BRN
0v
940
936
0.3A
F-801
930
935
934
937
S001
AC120v
60HZ
AC OUTLET
UN SWITCHED
100W. MAX

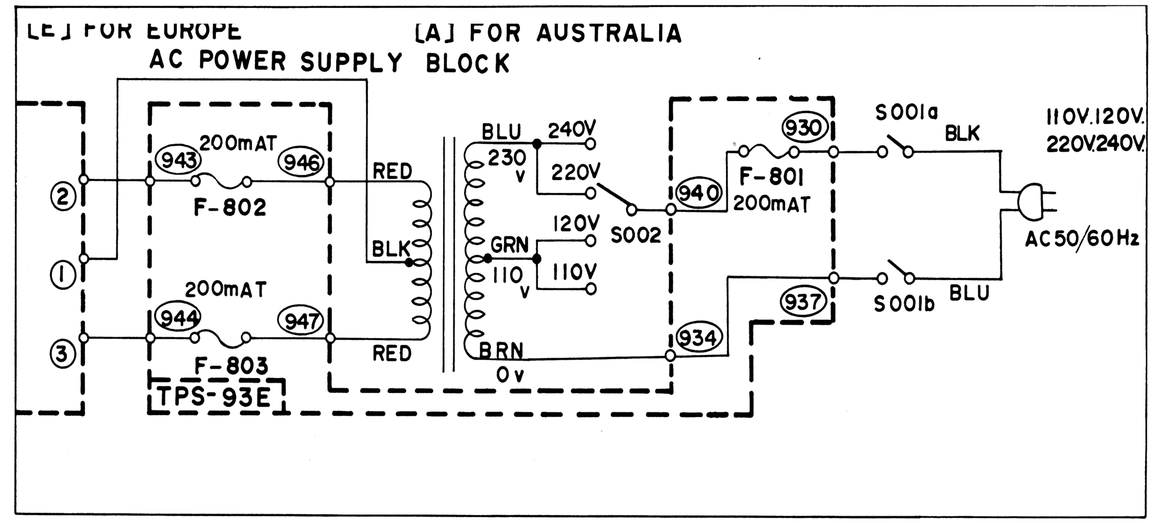
[E] FOR EUROPE
[A] FOR AUSTRALIA
AC POWER SUPPLY BLOCK
943 200mAT 946
F-802
944 200mAT 947
F-803
TPS-93E
RED
BLK
RED
BLU
230 v
240V
220V
120V
GRN
110 v
110V
BRN
0v
S002
940
930
F-801
200mAT
934
937
S001a
BLK
S001b
BLU
110V.120V.
220V.240V.
AC50/60Hz

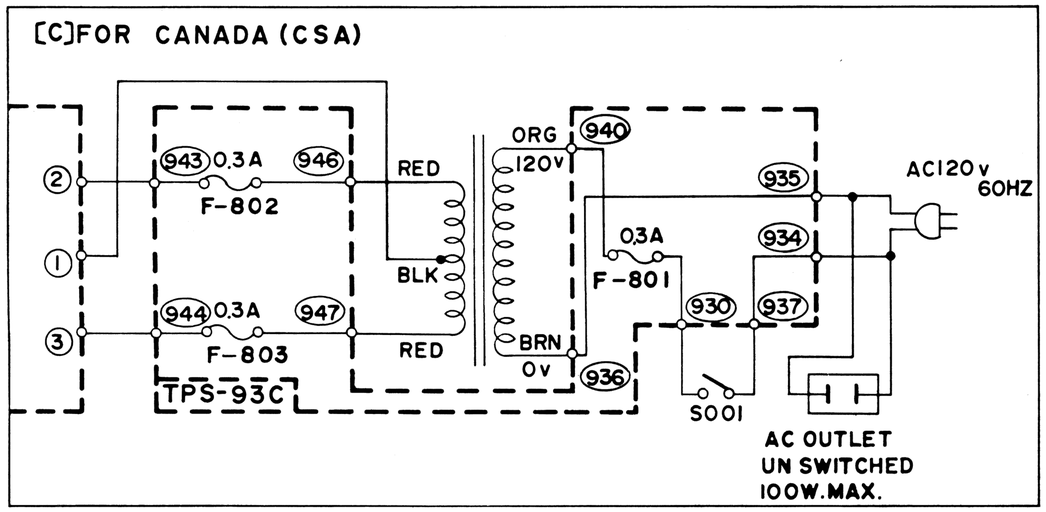
[C] FOR CANADA (CSA)
943 0.3A 946
F-802
944 0.3A 947
F-803
TPS-93C
RED
BLK
RED
ORG
120v
BRN
0v
940
936
0.3A
F-801
930
935
934
937
S001
AC120v
60HZ
AC OUTLET
UN SWITCHED
100W.MAX.

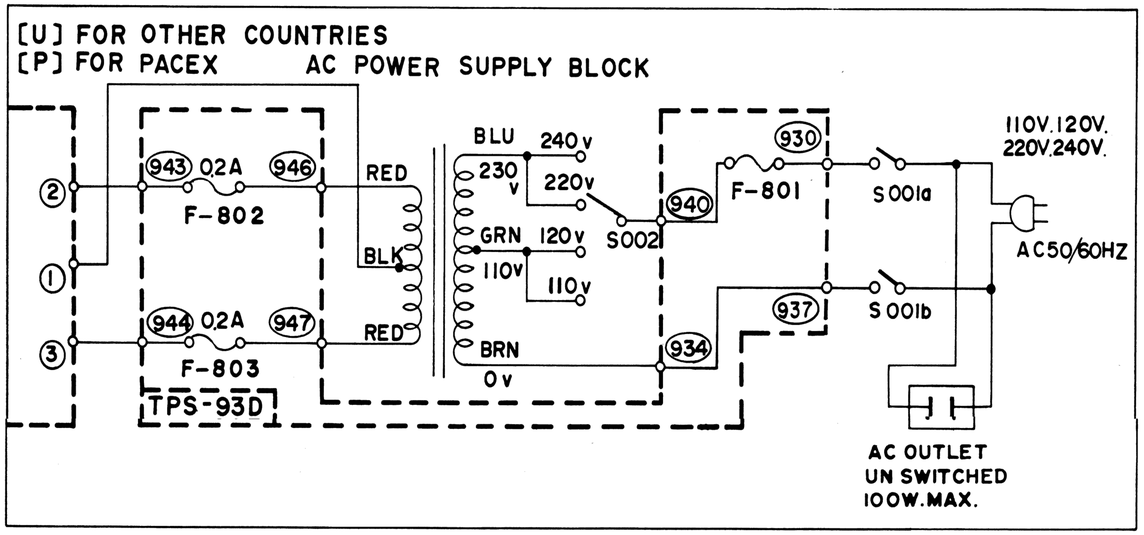
[U] FOR OTHER COUNTRIES
[P] FOR PACEX
AC POWER SUPPLY BLOCK
943 0.2A 946
F-802
944 0.2A 947
F-803
TPS-93D
RED
BLK
RED
BLU
230 v
240v
220v
GRN
120v
110V
110v
BRN
0v
S002
940
930
F-801
934
937
S001a
S001b
110V.120V.
220V.240V.
AC50/60HZ
AC OUTLET
UN SWITCHED
100W.MAX.

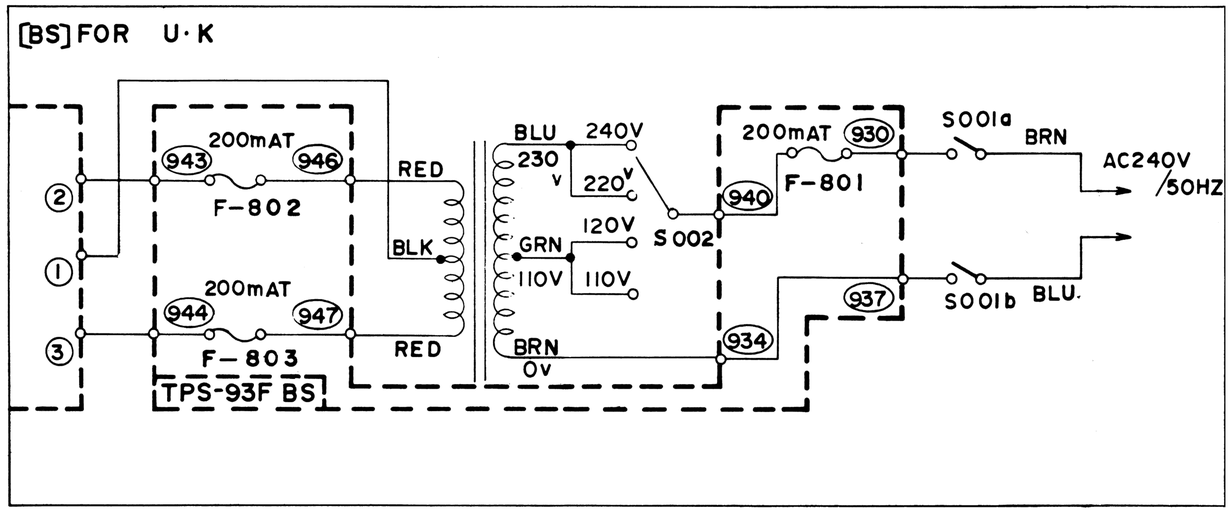
[BS] FOR U·K
943 200mAT 946
F-802
944 200mAT 947
F-803
TPS-93F BS
RED
BLK
RED
BLU
230 v
240V
220v
120V
GRN
110V
110V
BRN
0v
S002
940
930
200mAT
F-801
934
937
S001a
BRN
AC240V
/50HZ
S001b
BLU.