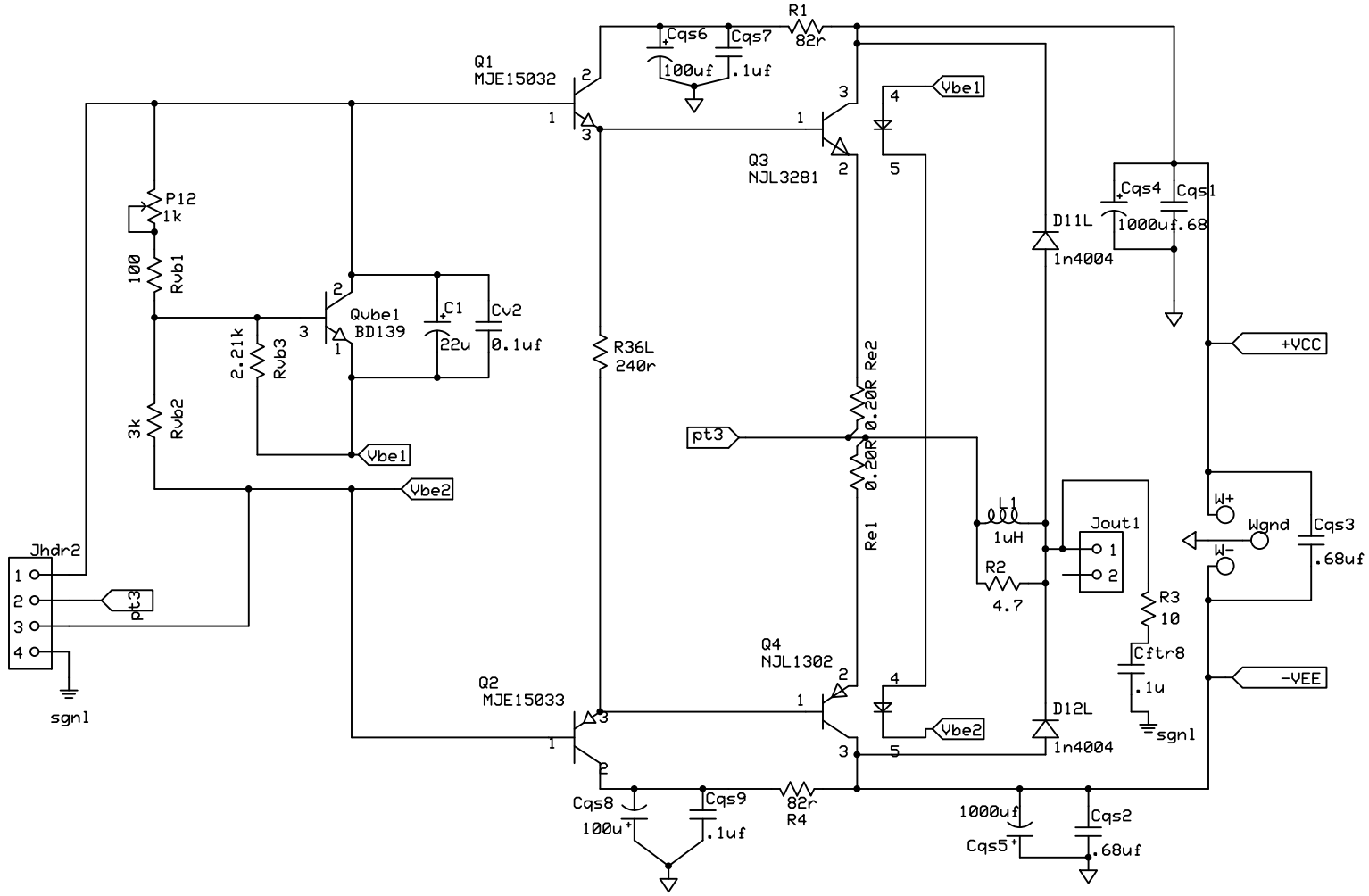

Company Name		
Schematic Name		
Designer's name	Rev 1.0 4/2/2009	Page # or name