CFA -X "H" mod1

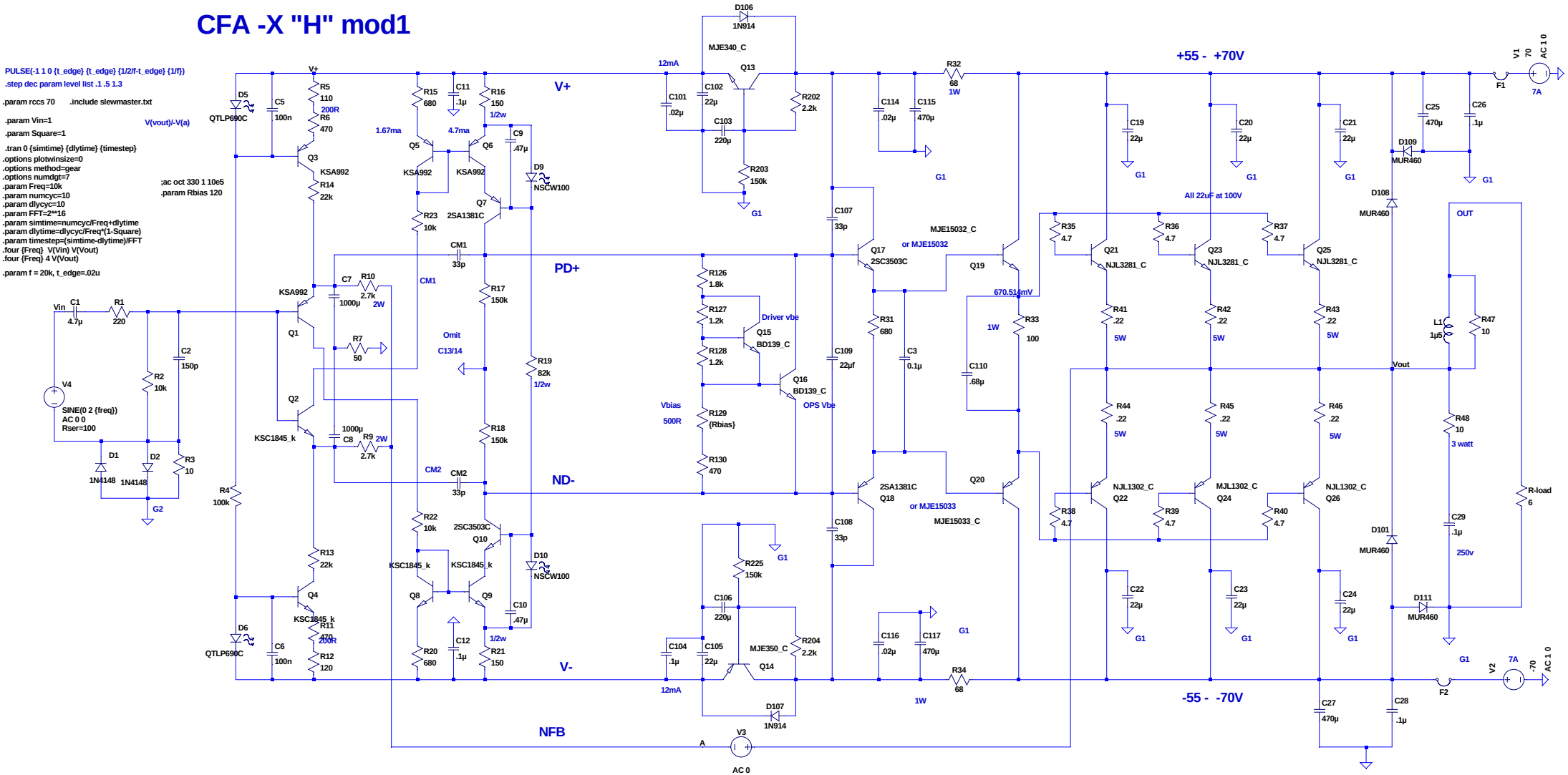
PULSE(-1 1 0 {t_edge} {t_edge} {1/2/f-t_edge} {1/f})
.step dec param level list .1 .5 1.3
.param rccs 70
.include slewmaster.txt
.param Vin=1
.param Square=1
.tran 0 {simtime} {dlytime} {timestep}
.options plotwinsize=0
.options method=gear
.options numdgt=7
.param Freq=10k
.param numcyc=10
.param dlycyc=10
.param FFT=2**16
.param simtime=numcyc/Freq+dlytime
.param dlytime=dlycyc/Freq*(1-Square)
.param timestep=(simtime-dlytime)/FFT
.four {Freq} V(Vin) V(Vout)
.four {Freq} 4 V(Vout)
.param f = 20k, t_edge=.02u
V(vout)/-V(a)
;ac oct 330 1 10e5
.param Rbias 120
+55 - +70V
-55 - -70V
V+
PD+
ND-
V-
NFB
OUT
Vout
Vin
Vbias
500R
Driver vbe
OPS Vbe
Omit
C13/14
CM1
CM2
All 22uF at 100V
670.514mV
12mA
1.67ma
4.7ma
SINE(0 2 {freq})
AC 0 0
Rser=100
R-load
6
3 watt
250v
AC 1 0
AC 0
7A
-70
70