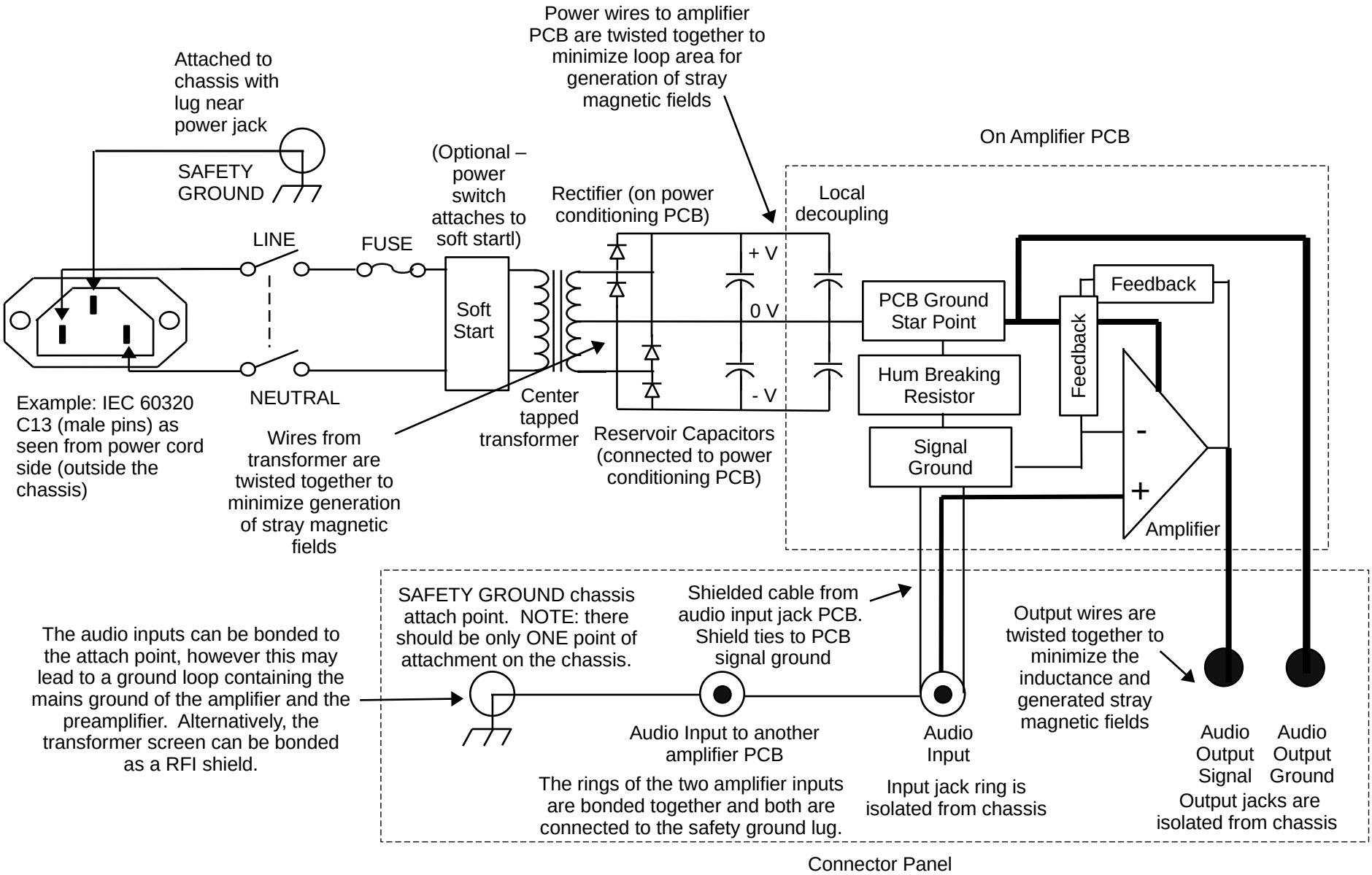Basic Power and Grounding Scheme for Amplifier