HiFi ENGINE®

For more Hi-Fi manuals and set-up information
please visit www.hifiengine.com

TA-E86B

AEP Model
UK Model
Canadian Model

STEREO PREAMPLIFIER

SPECIFICATIONS

SAFETY-RELATED COMPONENT WARNING!!

COMPONENTS IDENTIFIED BY SHADING AND MARK ⚠ ON THE SCHEMATIC DIAGRAMS, EXPLODED VIEWS AND IN THE PARTS LIST ARE CRITICAL TO SAFE OPERATION. REPLACE THESE COMPONENTS WITH SONY PARTS WHOSE PART NUMBERS APPEAR AS SHOWN IN THIS MANUAL OR IN SUPPLEMENTS PUBLISHED BY SONY.

ATTENTION AU COMPOSANT AYANT RAPPORT À LA SÉCURITÉ !

LES COMPOSANTS IDENTIFIÉS PAR UN TRAMÉ ET UNE MARQUE ⚠ SUR LES DIAGRAMMES SCHÉMATIQUES, LES VUES EXPLOSÉES ET LA LISTE DES PIÈCES SONT CRITIQUES POUR LA SÉCURITÉ DE FONCTIONNEMENT. NE REMPLACER CES COMPOSANTS QUE PAR DES PIÈCES SONY DONT LES NUMÉROS SONT DONNÉS DANS CE MANUEL OU DES SUPPLÉMENTS PUBLIÉS PAR SONY.

GENERAL

Power Requirements:	110,120, 220 or 240 V ac adjustable 50/60 Hz (AEP, UK Model) 120 V 60 Hz (Canadian Model)
Power Consumption:	15 watts
Demensions:	Approx. 480 (w) x 80 (h) x 366 (d) mm 19 (w) x $3^1/_8$ (h) x $14^1/_2$ (d) inches including projecting parts and controls
Weight:	Approx. 8.2 kg (18 lb 1 oz), net Approx. 10 kg (22 lb 1 oz), in shipping carton

— Continued on page 2 —

SONY®
SERVICE MANUAL

AMPLIFIER SECTION

Inputs

	Sensitivity	Impedance	Capacitance	Maximum input capability (1 kHz)	S/N (weighting network, input level)
PHONO	2.5 mV	100, 50, 25 Ω	100 pF	250 mV	87 dB (A, 2.5 mV)
PHONO (HEAD AMP)	0.125 mV	100 Ω (at the 40 Ω position) 25 Ω (at the 3 Ω position)	—	12.5 mV	78 dB (A, 0.2 mV)
TUNER	150 mV	50 kΩ	—	—	105 dB (A, 150 mV)
AUX					

Outputs

	Voltage	Impedance
REC OUT	150 mV (max. 13 V)	10 kΩ
OUTPUT 1	1.5 V (max. 13 V)	100 Ω
OUTPUT 2	1.5 V (max. 13 V)	100 Ω

Harmonic Distortion: Less than 0.003 % at 10 V output

Intermodulation (IM) distortion: (60 Hz : 7 kHz = 4 : 1) Less than 0.003 % at 10 V output

Frequency Response: PHONO RIAA equalization curve ± 0.2 dB

TUNER, TAPE, AUX: 5 Hz–500 kHz $^{+0}_{-1}$ dB

Filter: Low, 12 dB/octave attenuation below 15 Hz

Residual Noise: Less than 6 μV (weighting network A, IHF)

Bass Boost (output 2): + 6 dB (at 120 Hz)

0 dB = 0.775 V

MODEL IDENTIFICATION

Specification Label

Canadian Model

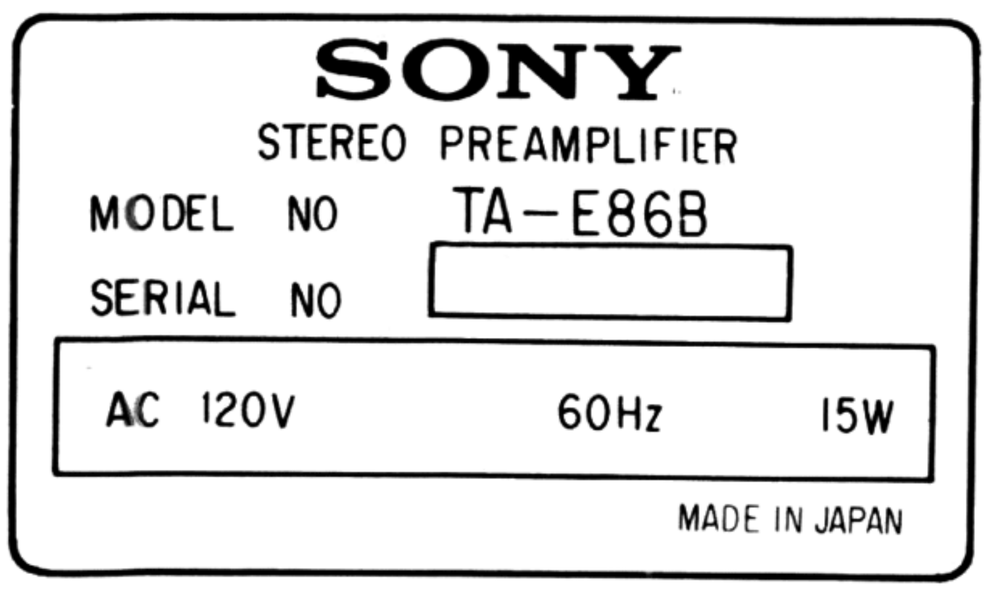

UK Model

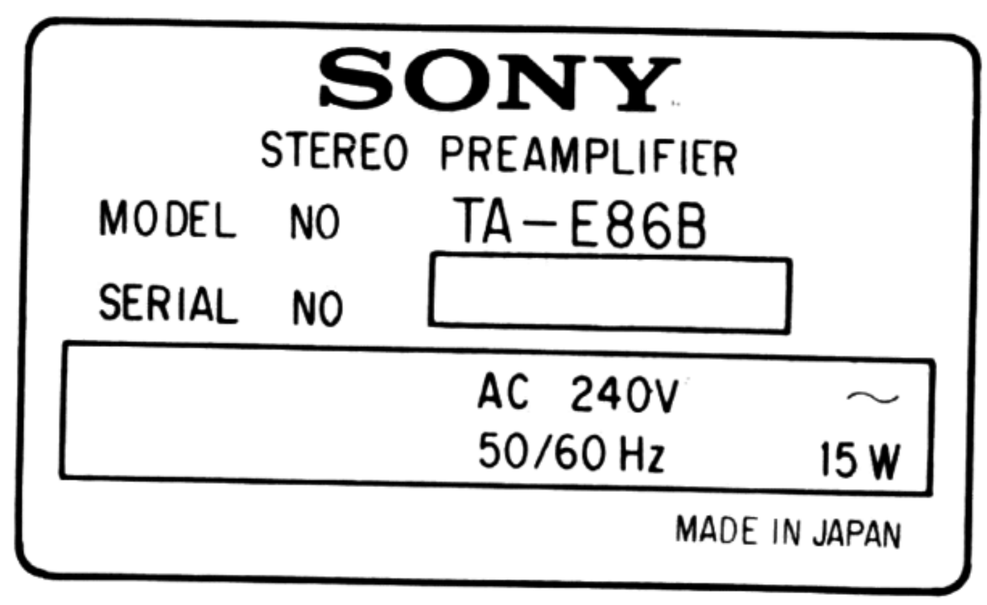

AEP Model

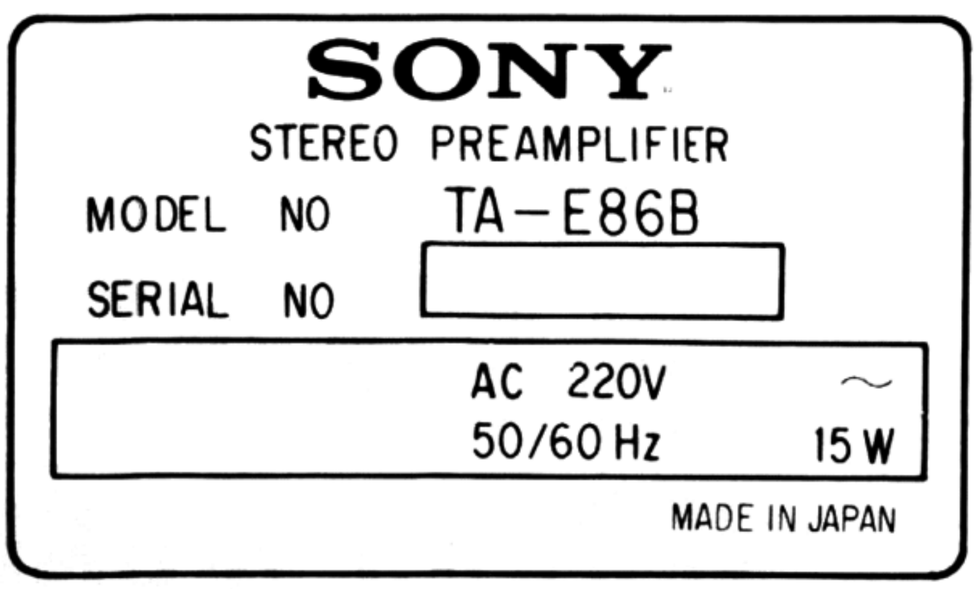

SERVICING NOTES

PARTS INFORMATION

1-1-1 Small Resistors

The TA-E86B uses many small resistors, similar to the type shown in Fig. A. These resistors are ¼ W metal-oxide with an accuracy of 1%.

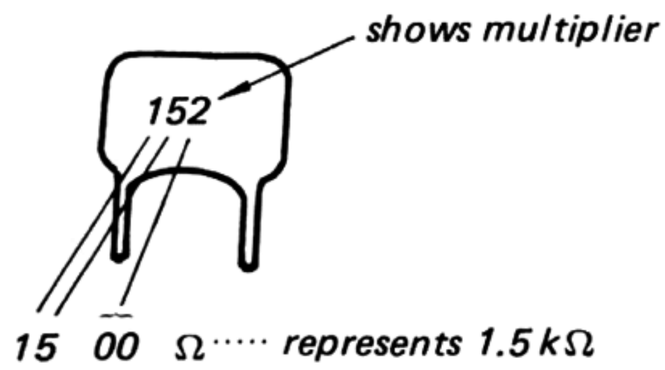

Fig. A

1-1-2 Square Tantalum Capacitors

The capacitors employed in the TA-E86B (as shown in Fig. B) are the same square tantalum capacitors as used in pulse circuit power supplies, etc. The capacitors are especially used in the B + and B − bus where their greater bypass effect is needed.

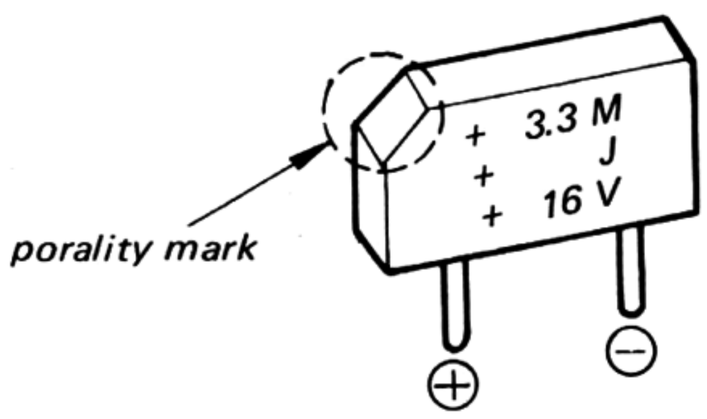

Fig. B

JOINT (B) REMOVAL

Do not pull the front part of the joint (B) in the direction shown by the arrow, because the front part is combined with the rear part through a spring. Be sure to loosen the set screws and remove the joint (B).

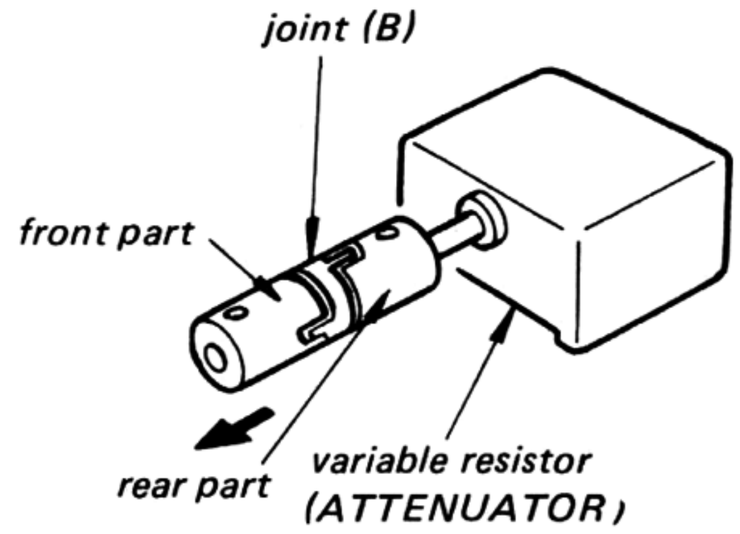

SECTION 1
OUTLINE

1-1. CIRCUIT DESCRIPTION

The TA-E86B has been designed without tone control circuits in the interest of maximizing such basic performance parameters as frequency response and signal-to-noise ratio, and minimizing distortion. The physical separation of each channel, plus a shield plate between the two portions contributes to an exceptionally low amount of cross-talk coupling between channels.

Head Amplifier (See Fig. 1-1)

1. To amplify the low output signal produced by the moving coil cartridge, low-noise LEC transistors (*1) connected in parallel are employed in a conventional differential amplifier circuit. In addition, the TA-E86B uses a newly-developed low-noise transistor (2SC2014) (*2) in the 1st-stage differential amplifier. This transistor is the equivalent of ten common transistors and the result is an especially high signal-to-noise ratio and superior distortion characteristics.
2. This amplifier has two input positions, one for 40 Ω and the other for 3 Ω. The 40 Ω position is for a cartridge with an output impedance of about 40 Ω (input impedance of the amplifier: about 100 Ω), and the 3 Ω position is for a cartridge with an output impedance of about 3 Ω (input impedance of the amplifier: about 25 Ω).
3. Q103 and Q104 serve as the load of Q101 and Q102 and form a current mirror circuit. The gain of the mirror circuit is increased by connecting the differential amplifier circuit consisting of Q101 and Q102. Furthermore, the phono signal is amplified by a SEPP (single-ended push-pull) circuit to minimize distortion.
4. Q105 and Q106 in the output stage are connected in a Darlington configuration to provide low-impedance outputs.

Note: *1 **LEC (Low-emitter Concentration) Transistors**
The LEC transistors are provided with emitter impurity concentrations of less than 1/1000 that of conventional transistors with the current-amplification factor maintained at the same or greater value as compared with conventional transistors.

*2 **Low-noise Transistor for Head Amplifier**
(See Fig. 1-2)
This transistor (2SC2014) has been developed for head amplifier use with moving-coil cartridges. To reduce noise as much as possible, the 2SC2014 avoids the formation of regions of high concentration at the emitter-base junction, and employs the very narrow emitter region (striped formation).

- **Cross-section of double-diffusion type transistor**

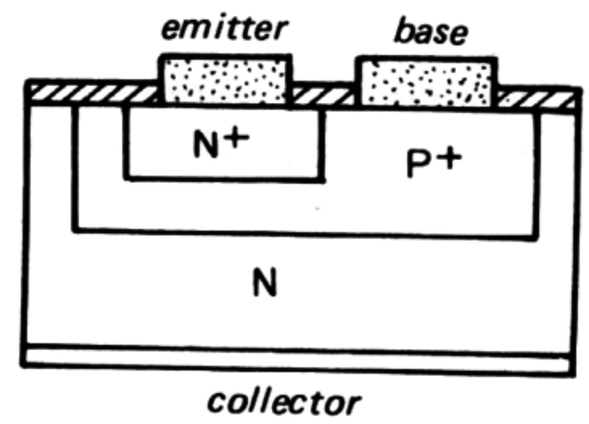

- **Cross-section of 2SC2014 transistor**

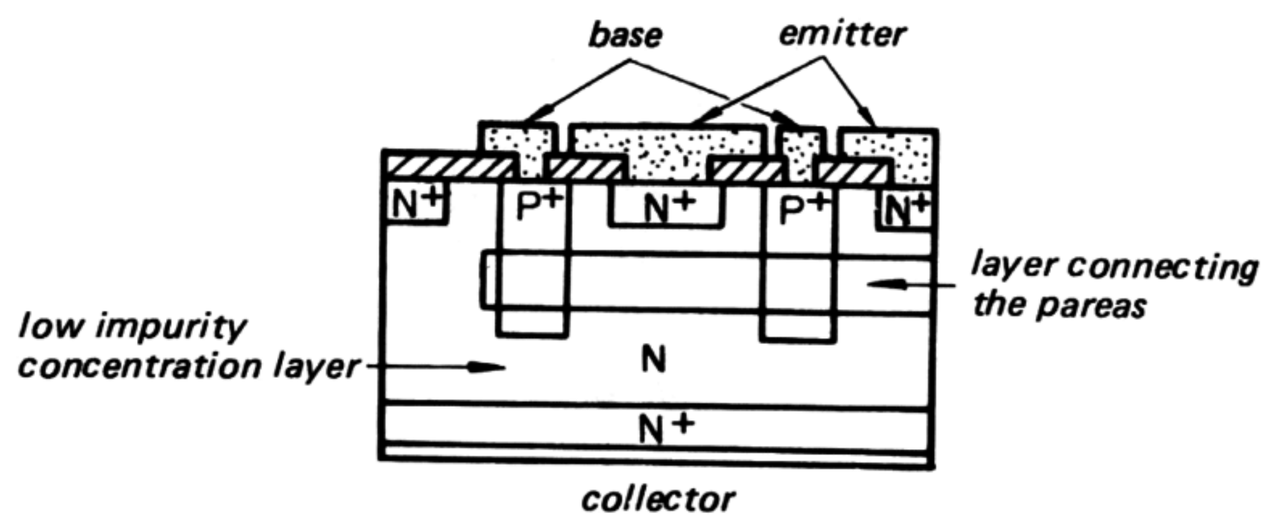

- **Cross-section of LEC transistors**

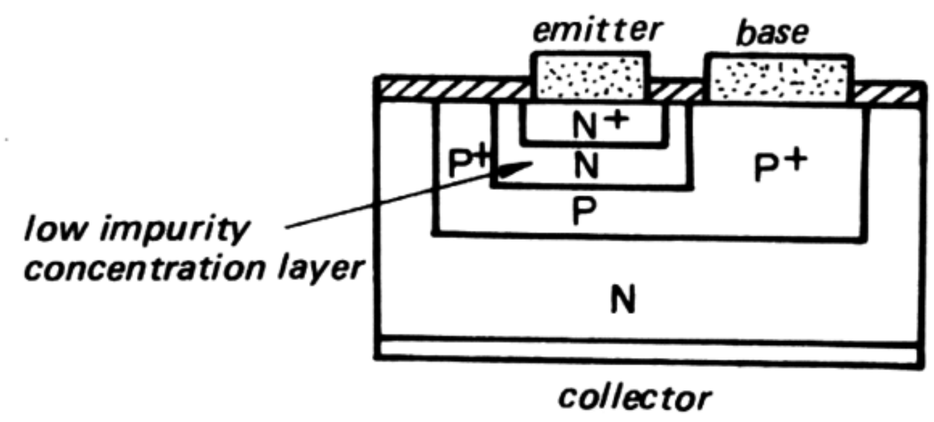

Fig. 1-2.

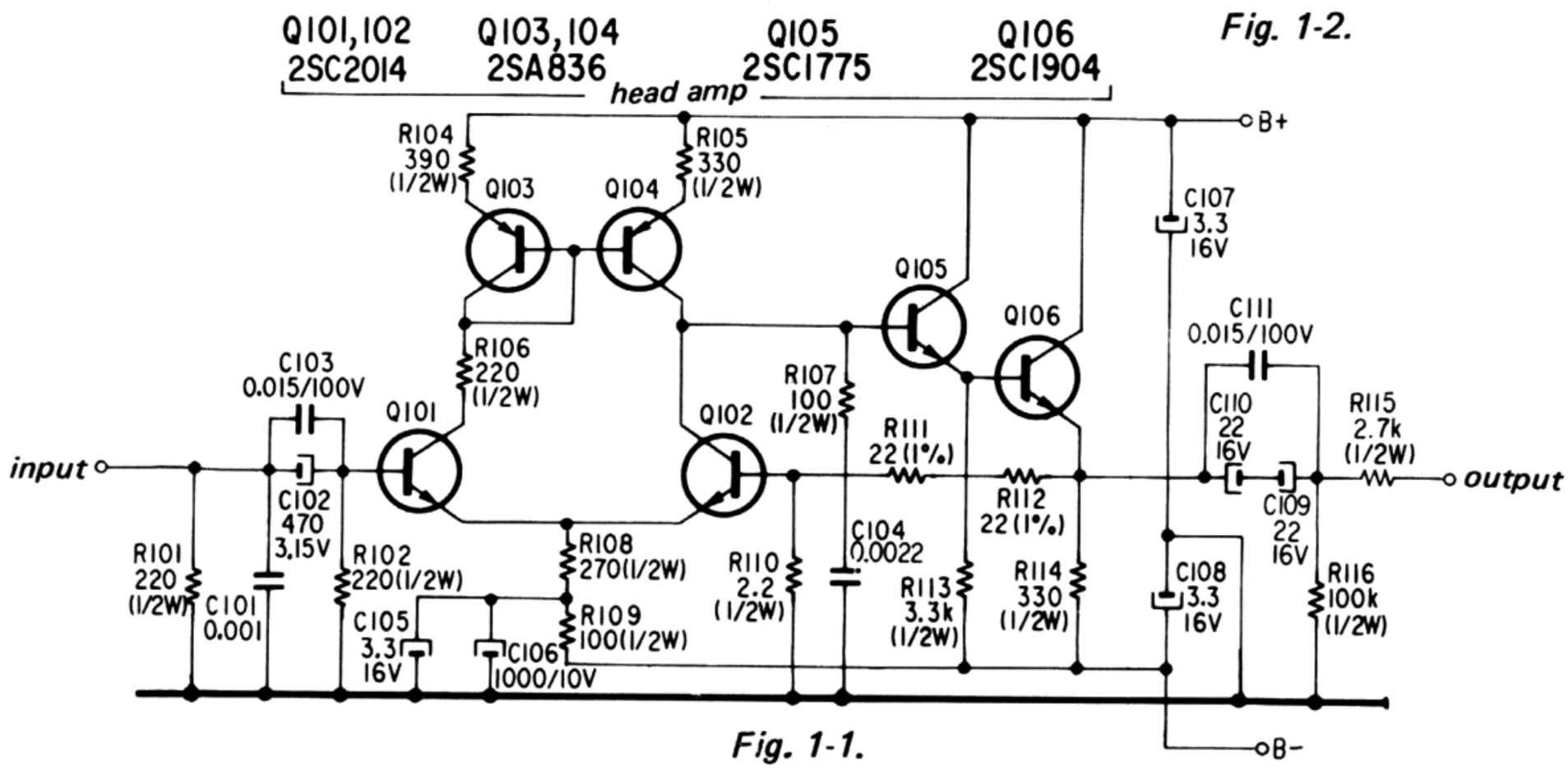

Fig. 1-1.

Technical Features:

- LEC structure, resulting in very low current-induced noise (particularly burst noise).
- Reduced base resistance as a result of high-precision technology. The LEC structure also controls the base resistance, resulting in voltage-induced noise 50% less than that in the conventional type of transistor used in a head amplifier.

Equalizer Amplifier (See Fig. 1-3)

The 1st-stage differential amplifier that is cascode connected consists of a dual FET (Q201) and the NPN transistors (Q202, Q203). This direct-coupled amplifier has little dc voltage drift with changes in temperature. Also, this amplifier compensates for high-frequency roll-off by reducing Miller effect due to feedback capacitance from the collector of the transistor. At the same time, this connection decreases the voltage between the source and the drain of Q201, reducing the shock noise caused by the leak current from the gate, and also reducing the distortion due to nonlinear characteristics of the circuit. The base voltage of Q202 and Q203 is maintained at about 10 V by a zener diode (D201). This results in a voltage between the drain and the source of 9 V. Q204 maintains a constant current in D201. Q205 and Q206 operate as a constant current supply circuit for Q201. The gate voltage of Q205 is kept at a constant level by the collector voltage determined by the V_{BE} of Q206. Therefore, this circuit always supplies constant current in spite of voltage fluctuation in the power supply circuit. D203 (EQA01-20R) which is a 20 V zener diode is turned off when the power supply voltage drops below a certain value (usually when the POWER switch is turned off). At the same time, the differential amplifier circuit is turned off, thereby preventing the presence of an unbalanced voltage in the output. A dual-FET (Q201) has been developed for the differential amplifier, which features a remarkable temperature characteristic.

The 2nd differential amplifiers (Q207 to Q212) are designed for low distortion and short rise time, minimizing the effect of the changes in temperature and noises produced in the power supply circuit.

The output stage incorporates a push-pull emitter-follower (Q213, Q214) to obtain the output signal with low impedance. The output from Q213 and Q214 is applied to the right gate of Q201 through the negative-feedback circuit consisting of R213 to R216, C204 and C206.

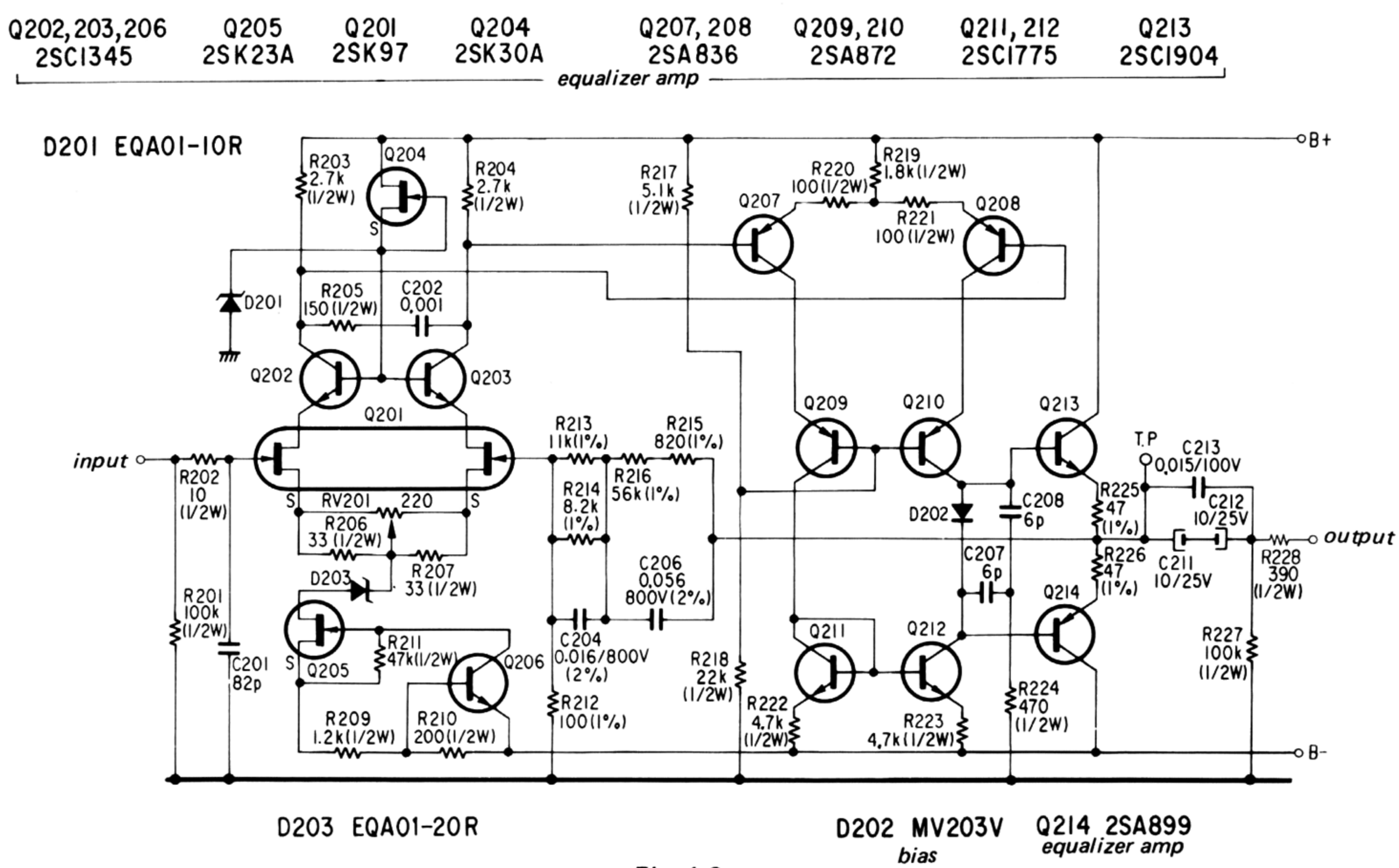

Fig. 1-3.

Flat Amplifier

The flat amplifier (Q301 to Q314) is very similar to the equalizer amplifier, except for the feedback circuit. To avoid any degradation of the frequency response by the cable capacitance when the pre-amplifier is disconnected to the power amplifier, the output impedance of the set is relatively low. The equalizer amplifier is designed for the RIAA equalization frequency response curve. On the other hand, the flat amplifier frequency response curve is practically flat (±0 dB) across the 5–500,000 Hz range.

Low-boost Amplifier (See Fig. 1-4)

1. This amplifier is used to boost the low frequency region, compensating for insufficient bass response. To make up the direct-coupled circuit, an FET is used for the 1st-stage amplifier and a push-pull emitter-follower for the output stage (Q403, Q404).
2. The low frequencies are emphasized by the twin-T network feedback circuit (C402 to C404, R405, R406, R408, R409). Fig. 1-5 shows the resultant frequency response curve.

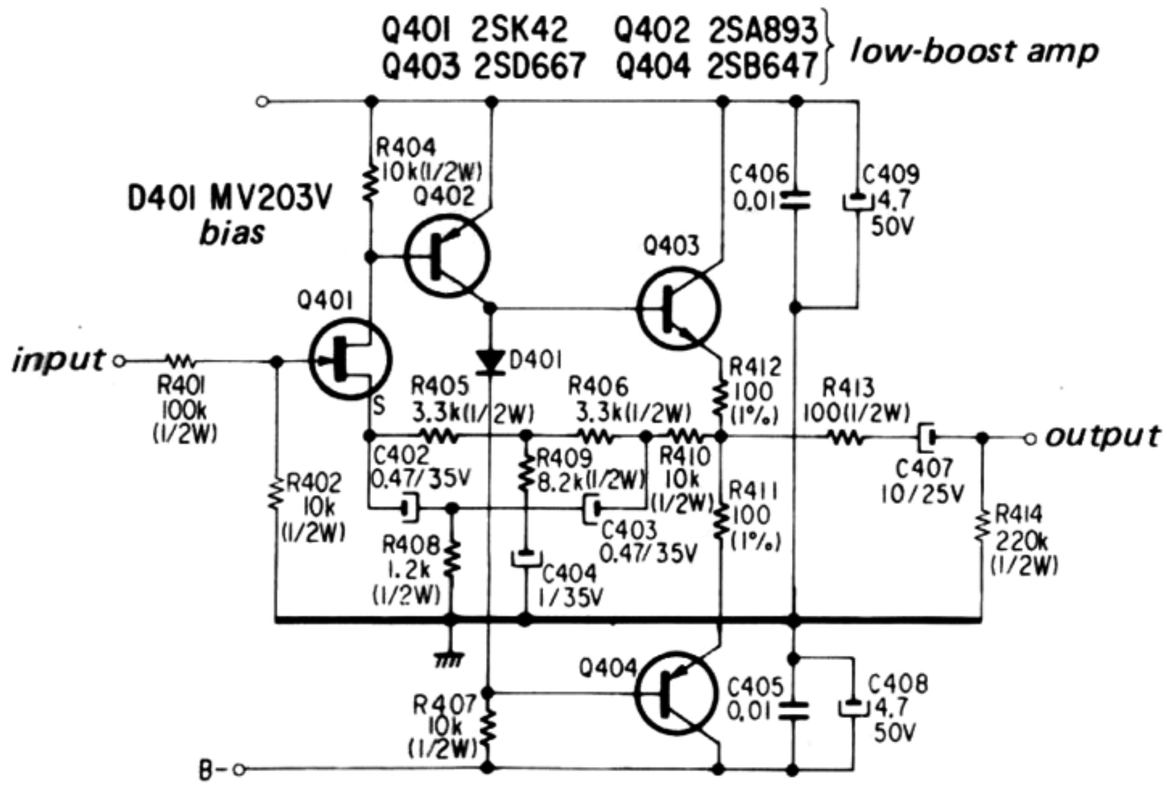

Fig. 1-4.

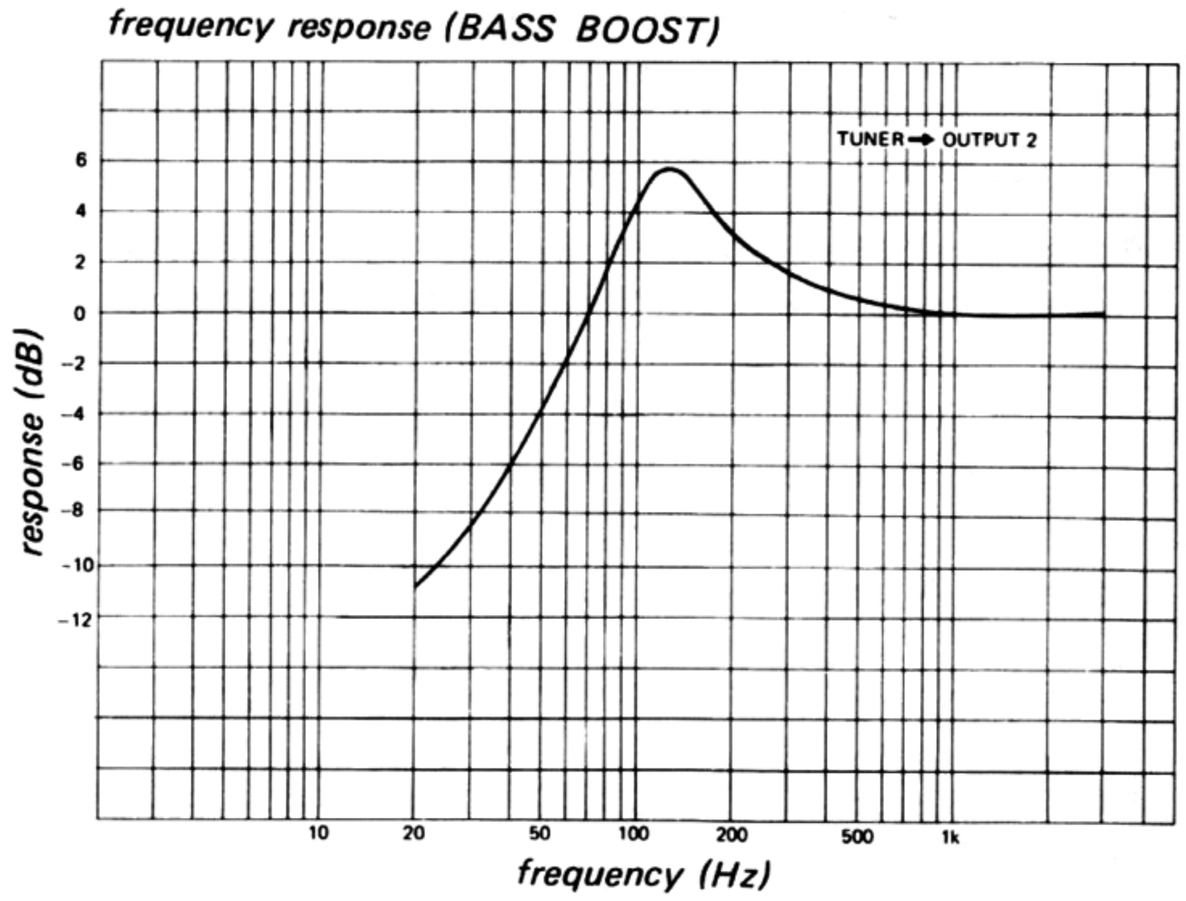

Fig. 1-5.

Power Supply Circuit (See Fig. 1-6)

Q601 to Q618 form the power supply cirucit for the head amplifier, while Q619 to Q634 form the power supply circuit for the other amplifier. The description outlined below refers to the former.

1. The base voltage of Q608 in the differential amplifier is maintained at 4.5 V by Q607. The resistive voltage divider network (R609, R611) senses any voltage change proportional to changes in the output voltage, and applies it to the base of Q609. This voltage is amplified by the differential amplifier (Q608, Q609) and the two transistors (Q604, Q605) that are connected in a Darlington configuration. The amplified voltage controls Q602 and Q603. As a result, the output voltage is essentially constant.
2. Q601 serves as a constant current load for Q604 and Q605, while Q606 supplies Q607 with constant current.

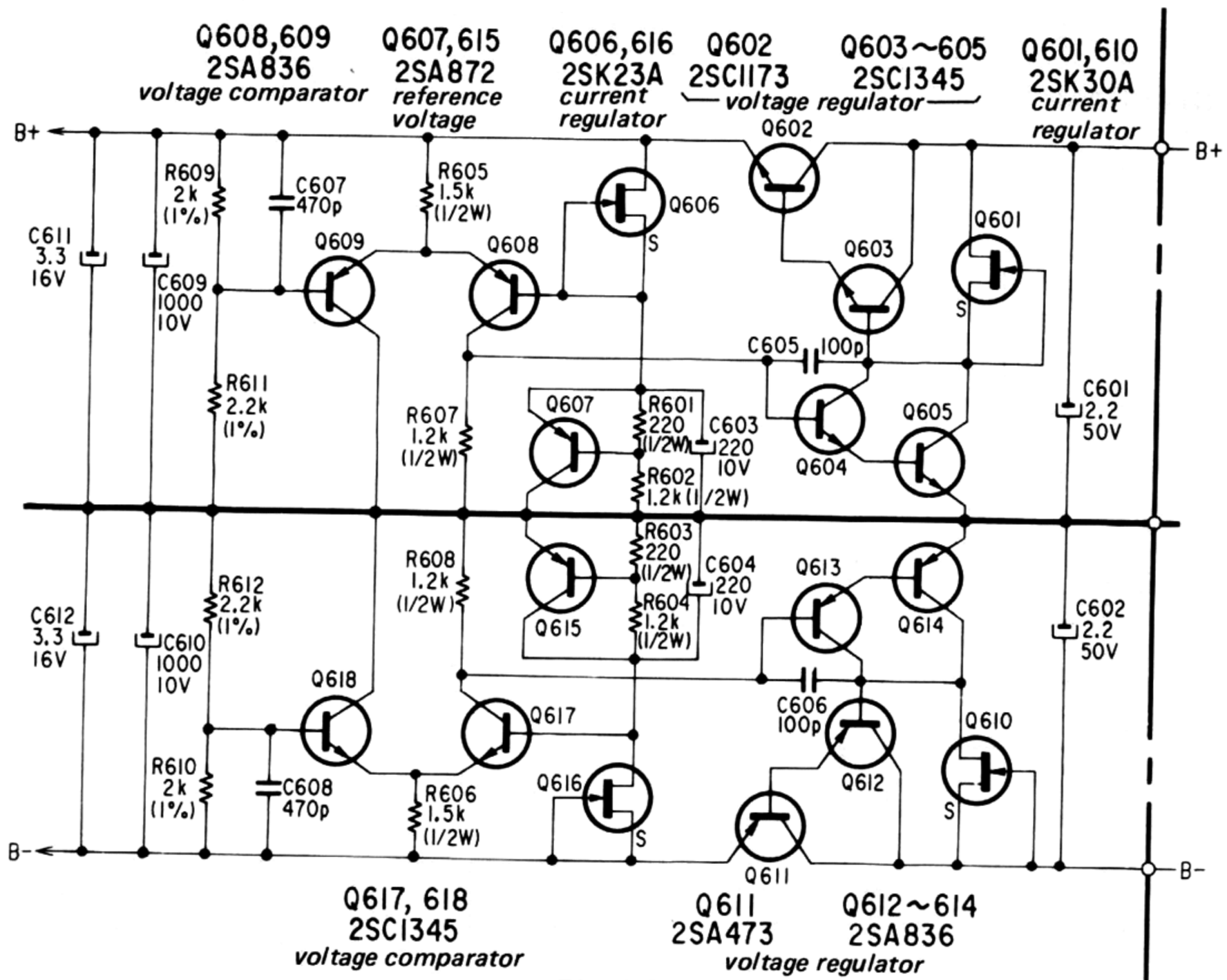

Fig. 1-6.

Muting Circuit (See Fig. 1-7)

The muting circuit eliminates the pop noises generated when the POWER switch is turned on and off. This is accomplished by releasing the relays (RY301, RY351) inserted between the amplifier circuit and the output terminal.

a) When the POWER switch is turned on:

1. B+ and B− voltage are applied to the relay-drive circuit, and C511 is charged according to the time constant consisting of R507 and C511.

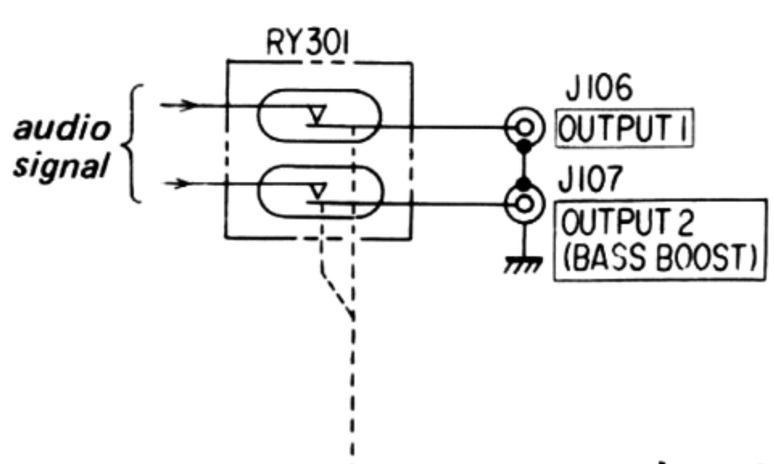

2. Q501 and Q502 remain off until C511 is charged up (about 7 to 8 seconds later). The relays (RY301, RY351) also remain off during this period, thereby preventing any audio signals and the pop noise generated when the POWER switch is turned on from reaching the output terminals.
3. After 7 to 8 seconds, the base voltage of Q501 becomes high enough to turn Q501 and Q502 on. This activates the relays (RY301, RY351), and the audio signal is furnished to the output terminal.

b) When the POWER switch is turned off:

1. C511 discharges through D505, D504 and R503, and Q502 is turned off. As a result, the relays (RY301, RY351) are turned off immediately.
2. The noise generated when the POWER switch is turned off is removed from the output terminal by the opening of the relays.

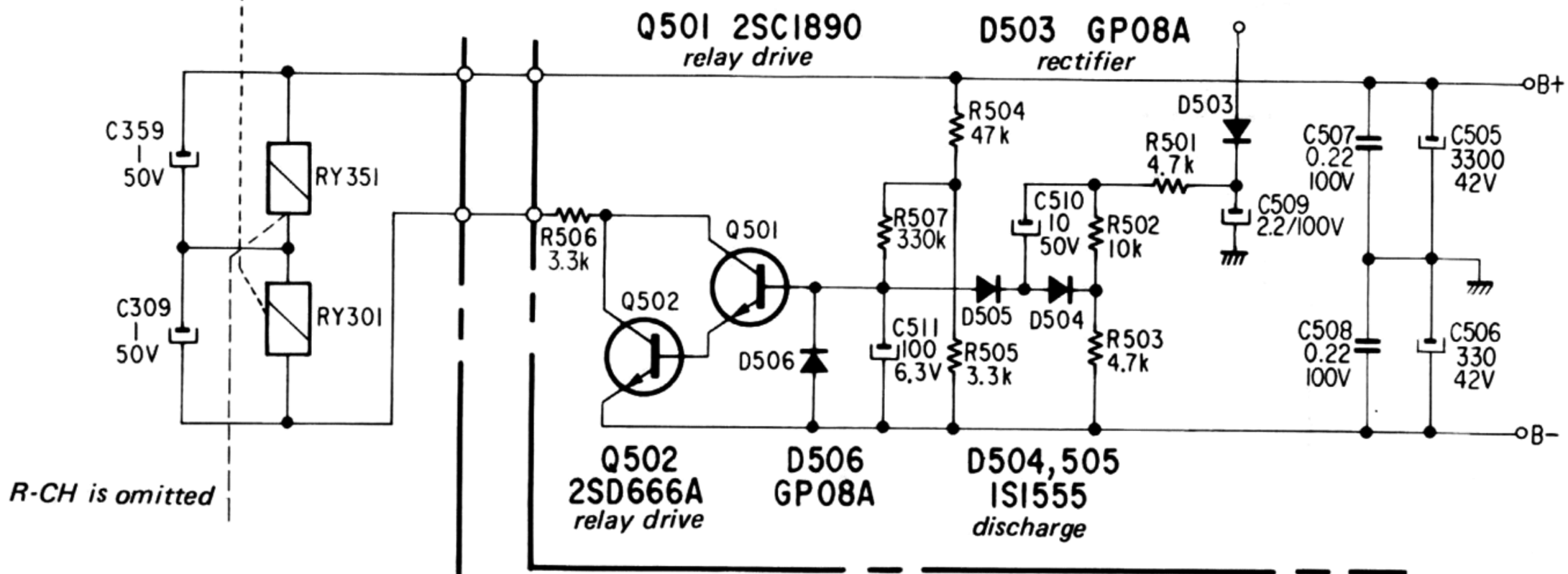

Fig. 1-7.

1-2. BLOCK DIAGRAM

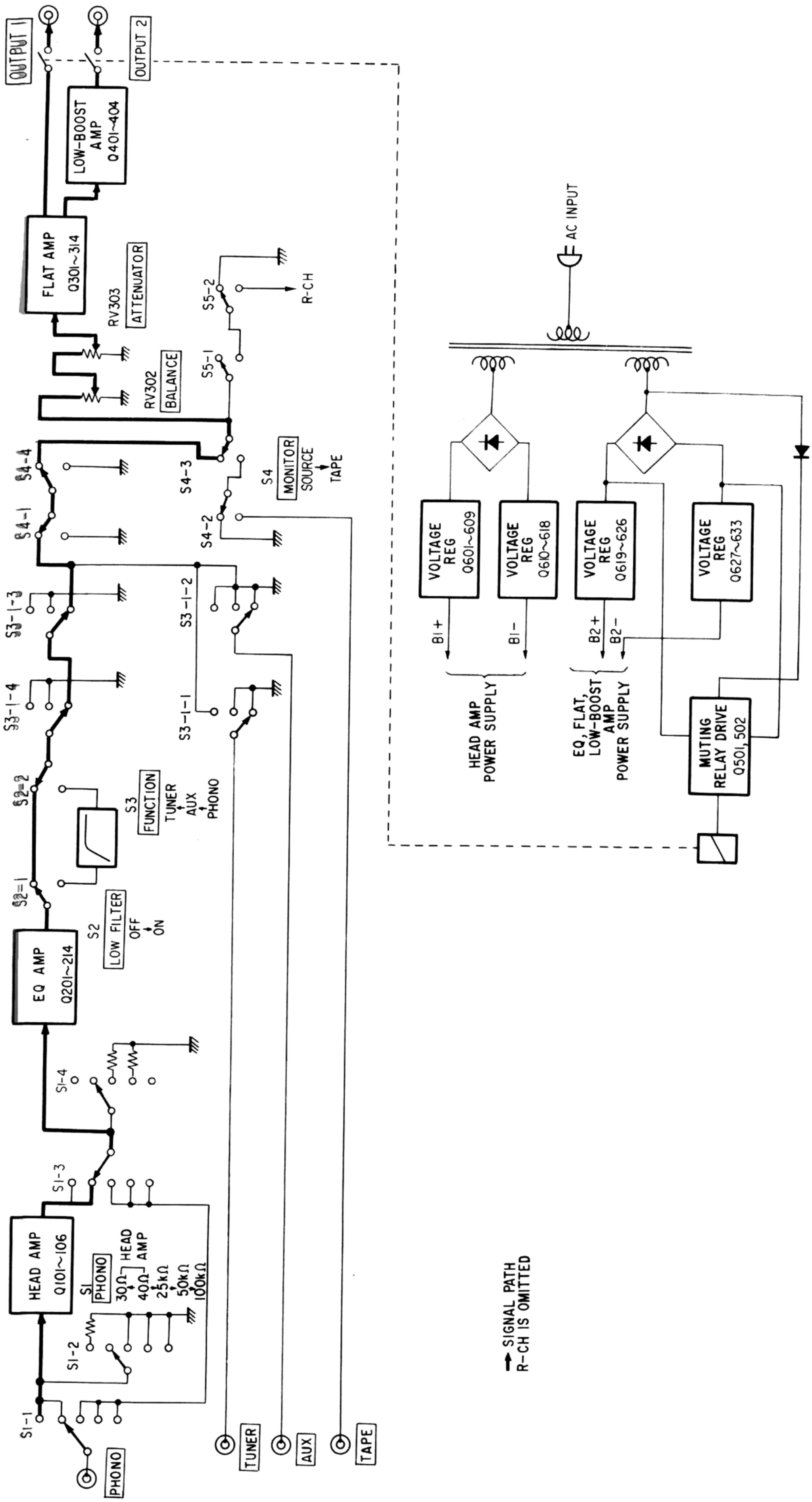

SECTION 2
DISASSEMBLY

- Follow the disassembly procedure in the numerical order given.

TOP COVER REMOVAL

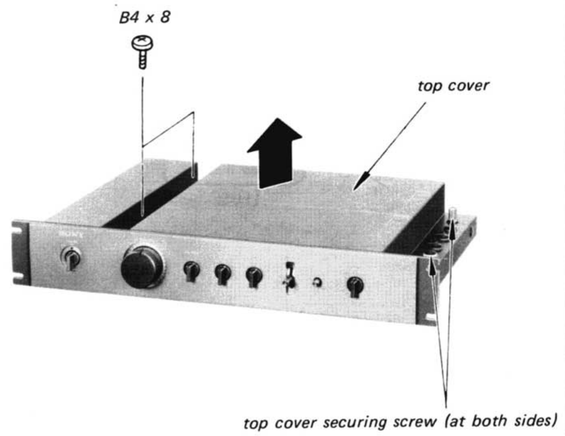

FRONT PANEL REMOVAL

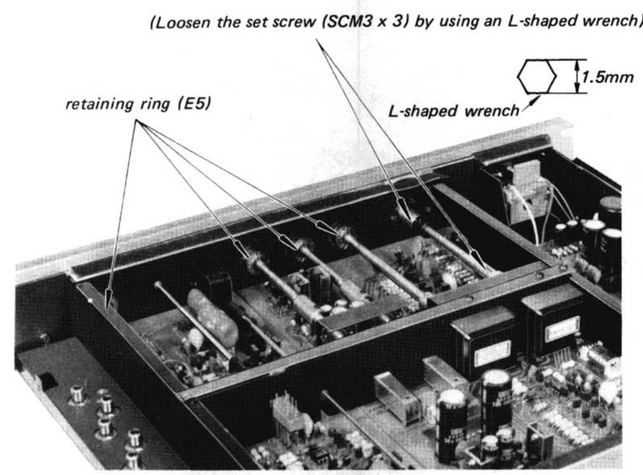

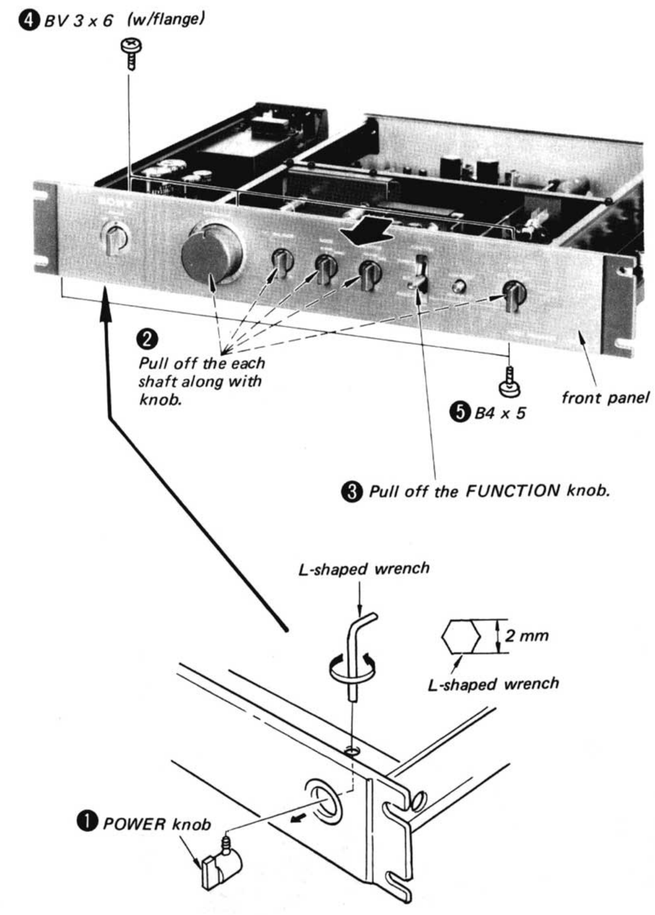

BOTTOM PLATE REMOVAL

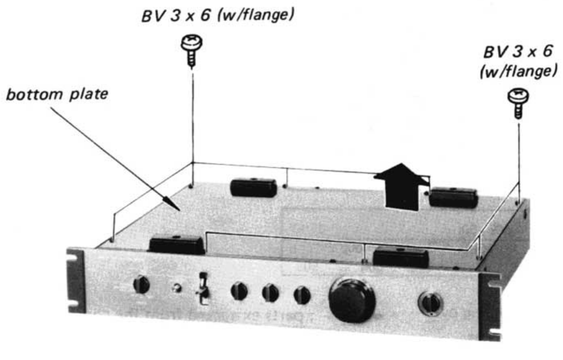

Note: The each cicuit board can be checked in this condition.

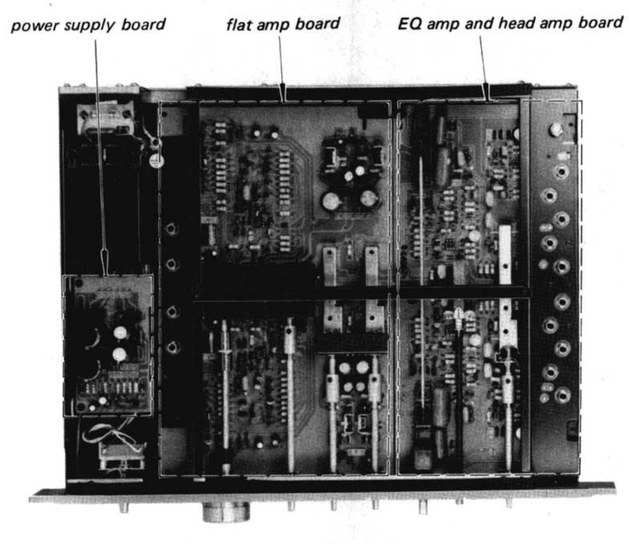

SECTION 3
ADJUSTMENT

OFFSET ADJUSTMENT

Setup:

POWER switch (S6)	: ON
ATTENUATOR (RV303, 353)	: minimum (fully counterclockwise)
BALANCE control	: mechanical-mid
MODE switch (S5)	: STEREO
MONITOR switch (S4)	: SOURCE
FUNCTION switch (S3)	: PHONO
LOW FILTER switch (S2)	: OFF
PHONO switch (S1)	: 25 kΩ

Procedure:

1. Terminate the PHONO input with a shorting plug.
2. Adjust RV 201(L-CH) and RV 251(R-CH) for 0 V dc reading on the VOM.

Specifications:

0 ± 0.5 Vdc

Adjustment Location:

–EQ amp and head amp board–

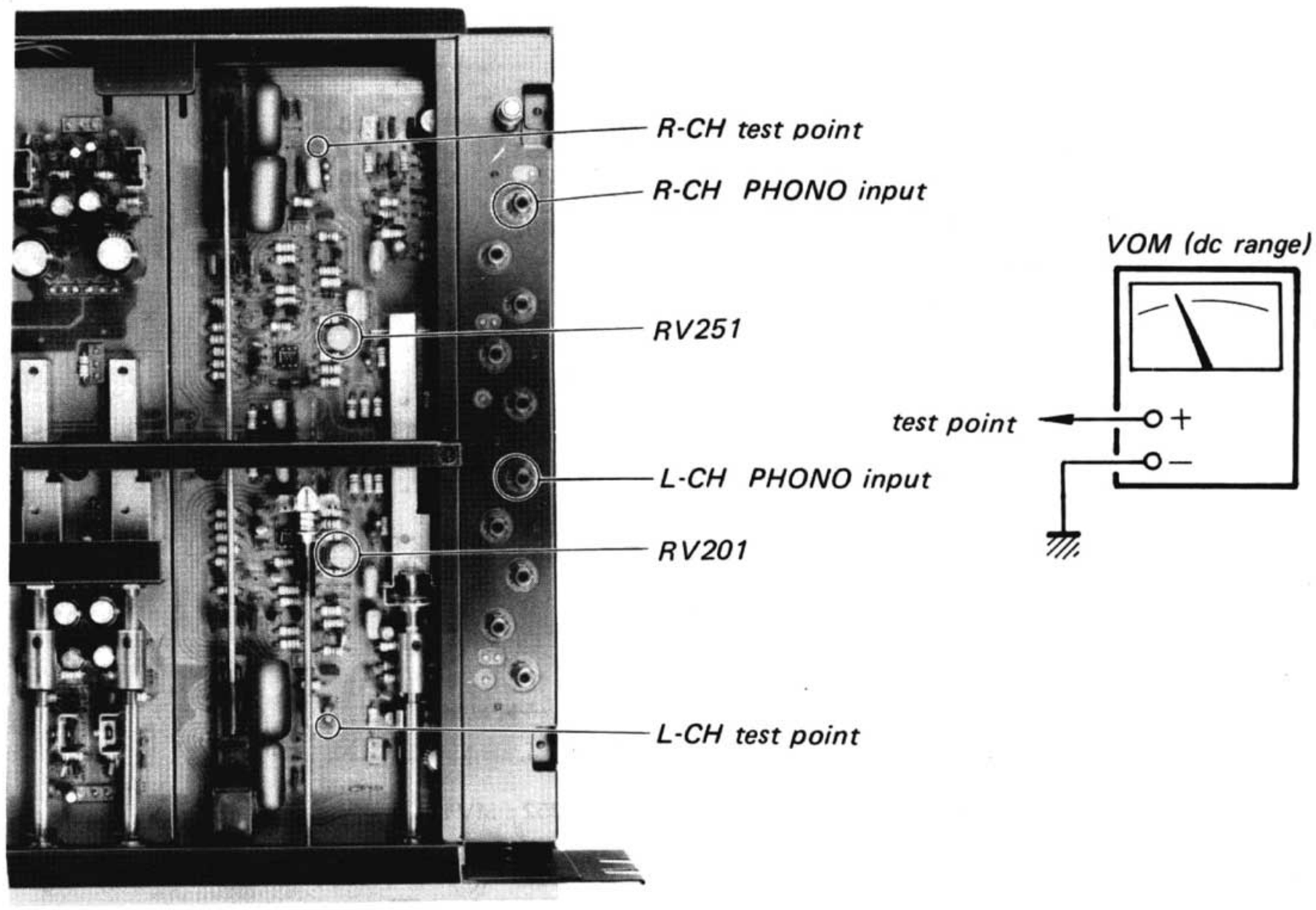

MUTING TIME CHECK

Confirm the operation of the relays (RY301, 351).

- RY301 and RY351 are energized about eight seconds later after the POWER switch is turned on.
- RY301 and RY351 are released as soon as the POWER switch is tuned off.

SECTION 4
DIAGRAMS

4-1. MOUNTING DIAGRAM.

- **Replacement Semiconductors**

For replacement, use semiconductors except in ( ).

Q101, 151 / Q102, 152 : 2SC2014 (TX608)
Q105, 155 / Q211, 261 / Q212, 262 : 2SC1775-E (2SC1775)

Q103, 153 / Q104, 154 / Q207, 257 / Q208, 258 / Q608, 609 / Q612–614 : 2SA872-E

(2SA836)

Q106, 156 / Q213, 263 : 2SC1904

Q201, 251 : 2SK97
Q301, 351 : 2SK58

Q202, 252 / Q203, 253 / Q206, 256 / Q603–605 / Q617, 618 : 2SC1345

Q302, 352 / Q303, 353 / Q306, 356 / Q621–623 / Q632, 633 : 2SC1345 (2SC458)

Q204, 254 / Q304, 354 / Q601, 610 / Q619, 627 : 2SK30A

Q205, 255 / Q305, 355 / Q606, 616 / Q624, 634 : 2SK23A-834 (2SK23A)

Q209, 259 / Q210, 260 / Q607, 615 : 2SA872-E (2SA872)
Q309, 359 / Q310, 360 / Q402, 452 : 2SA639S (2SA893)
Q314, 364 / Q404, 454 : 2SA896 2SB647

Q214, 264: 2SA896

(2SA899)

Q307, 357 / Q308, 358 / Q625, 626 / Q629–631 : 2SA678

(2SA844)

Q311, 361 / Q312, 362 / Q501 : 2SC926A

(2SC1890)

Q401, 451: 2SK42-2 (2SK42)

Q313, 363: 2SC1811
Q403, 453: 2SD667
Q502: 2SC1811 (2SD666A)

Q602, 620: 2SC1173

Q611, 628: 2SA473

D201, 251 / D301, 351 : EQB01-10 (EQA01-10R)
D203, 253 / D303, 353 : EQB01-20 (EQA01-20R)
D601, 602 : EQB01-16 (EQA01-16A)

D202, 252 / D401, 451 : MV203V

D302, 352 : MV104 V

D501, 502: S1RB10

D503, 506: U05G

(GP08A)

D504, 505: 1S1555

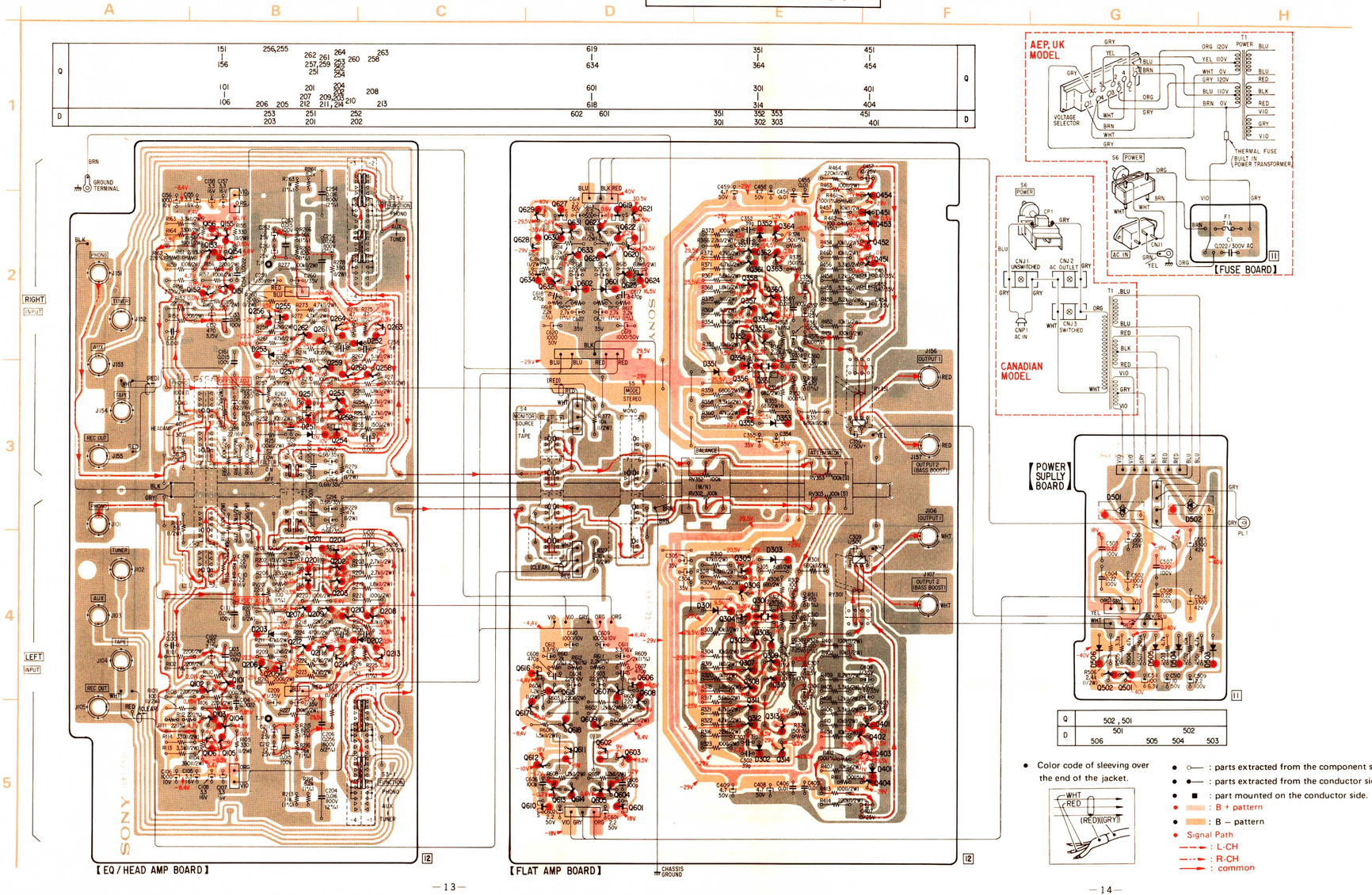

- Color code of sleeving over the end of the jacket.

- ○—○ : parts extracted from the component side.
- ●—● : parts extracted from the conductor side.
- ■ : part mounted on the conductor side.
- B + pattern
- B − pattern
- Signal Path
  - L-CH
  - R-CH
  - common

4-2. SCHEMATIC DIAGRAM

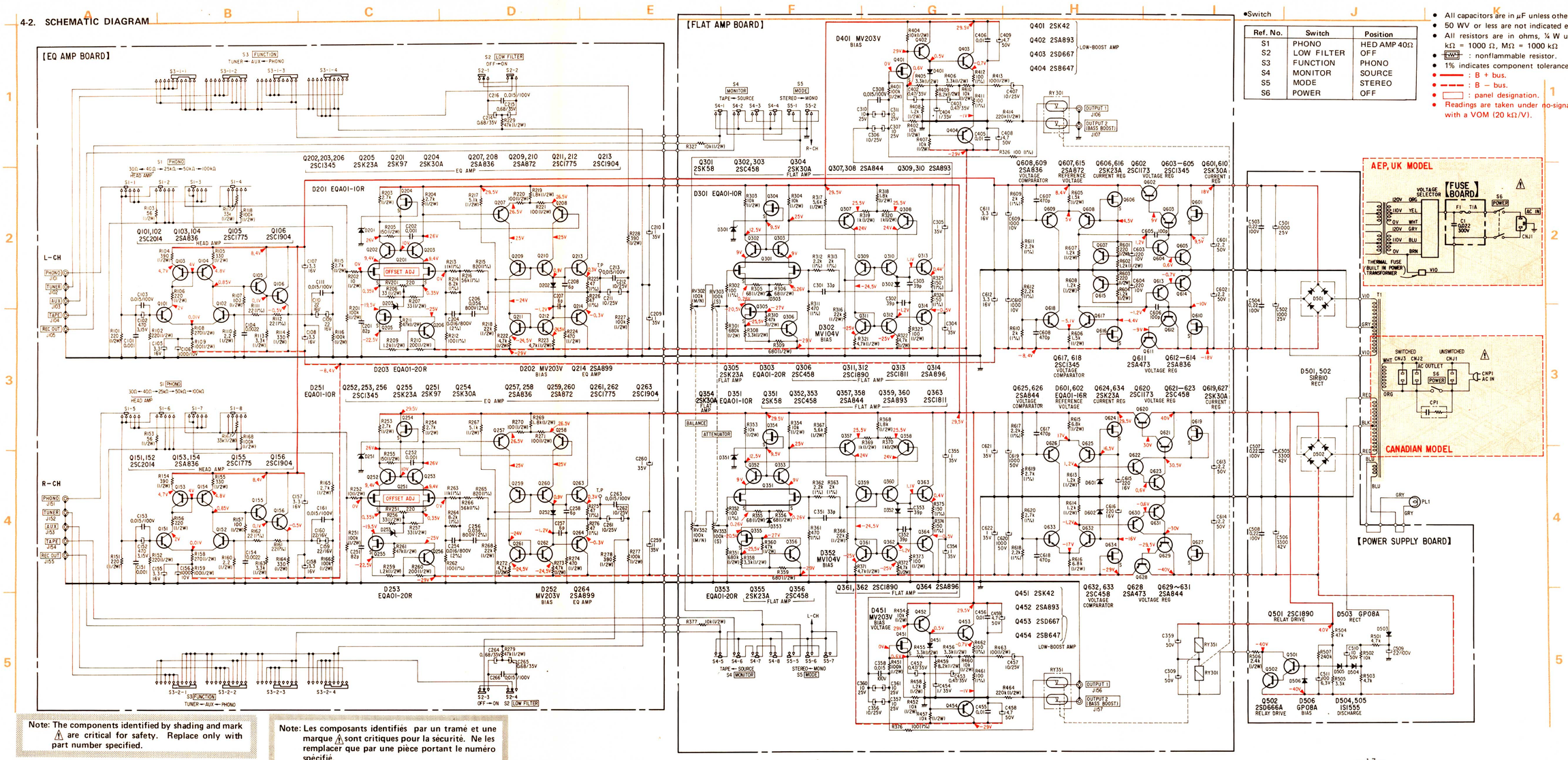

•Switch

Ref. No.	Switch	Position
S1	PHONO	HED AMP 40Ω
S2	LOW FILTER	OFF
S3	FUNCTION	PHONO
S4	MONITOR	SOURCE
S5	MODE	STEREO
S6	POWER	OFF

- All capacitors are in μF unless otherwise noted. pF = μμF.
- 50 WV or less are not indicated except for electrolytics.
- All resistors are in ohms, ¼ W unless otherwise noted. kΩ = 1000 Ω, MΩ = 1000 kΩ
- ▭ : nonflammable resistor.
- 1% indicates component tolerance.
- ——— : B + bus.
- - - - : B − bus.
- ▭ : panel designation.
- Readings are taken under no-signal (detuned) conditions with a VOM (20 kΩ/V).

Note: The components identified by shading and mark ⚠ are critical for safety. Replace only with part number specified.

Note: Les composants identifiés par un tramé et une marque ⚠ sont critiques pour la sécurité. Ne les remplacer que par une pièce portant le numéro spécifié.

SECTION 5

EXPLODED VIEWS

Note: Circled letters (Ⓐ to Ⓩ) are applicable to European models only.

5-1.

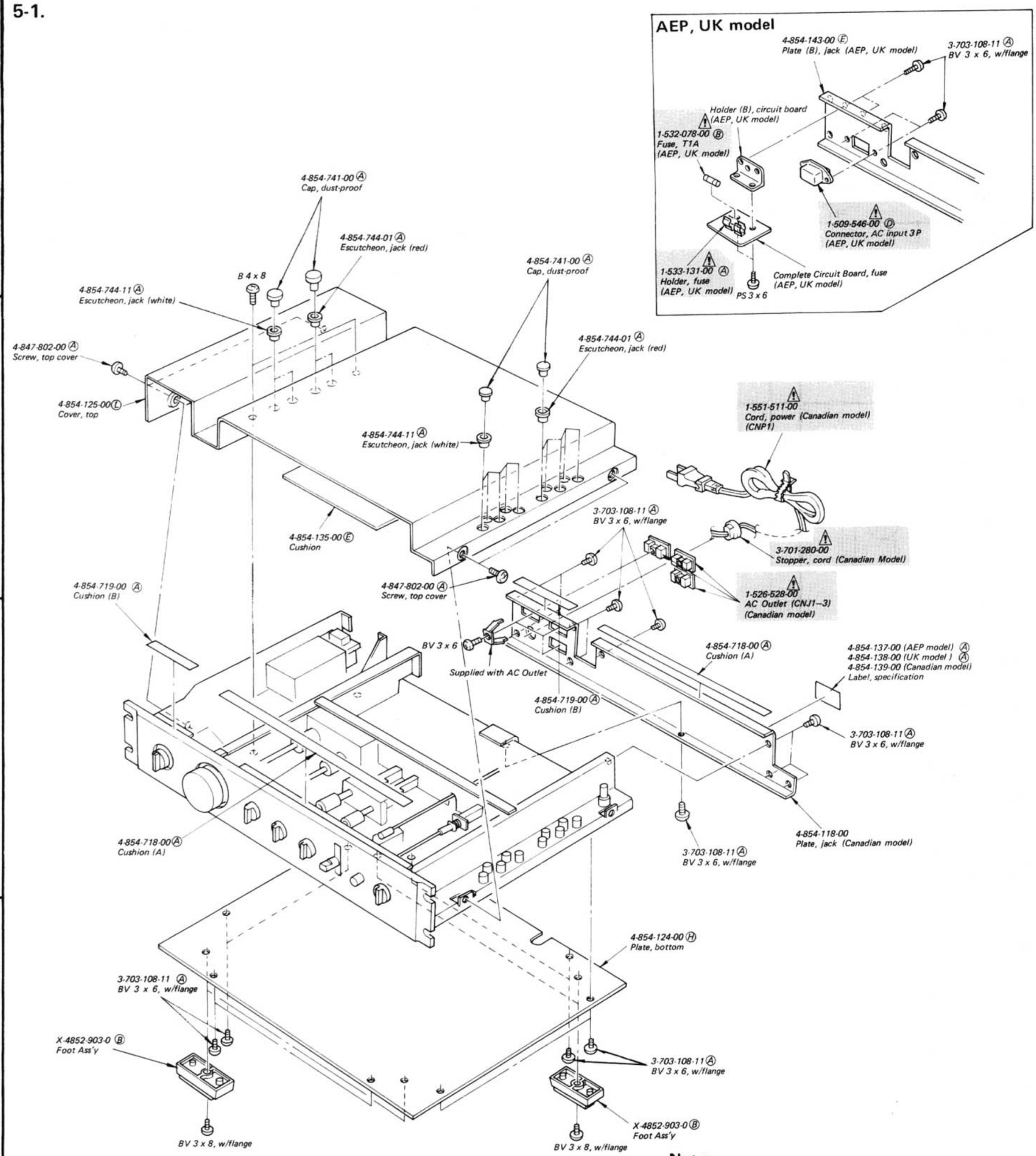

Note:

- Items with no part number and/or no description are not stocked because they are seldom required for routine service.
- All screws are Phillips (cross recess) type unless otherwise noted.
  (–) = slotted head

Note: The components identified by shading and mark ⚠ are critical for safety. Replace only with part number specified.

Note: Les composants identifiés par un tramé et une marque ⚠ sont critiques pour la sécurité. Ne les remplacer que par une pièce portant le numéro spécifié.

Note: Circled letters (Ⓐ to Ⓩ) are applicable to European models only.

5-2

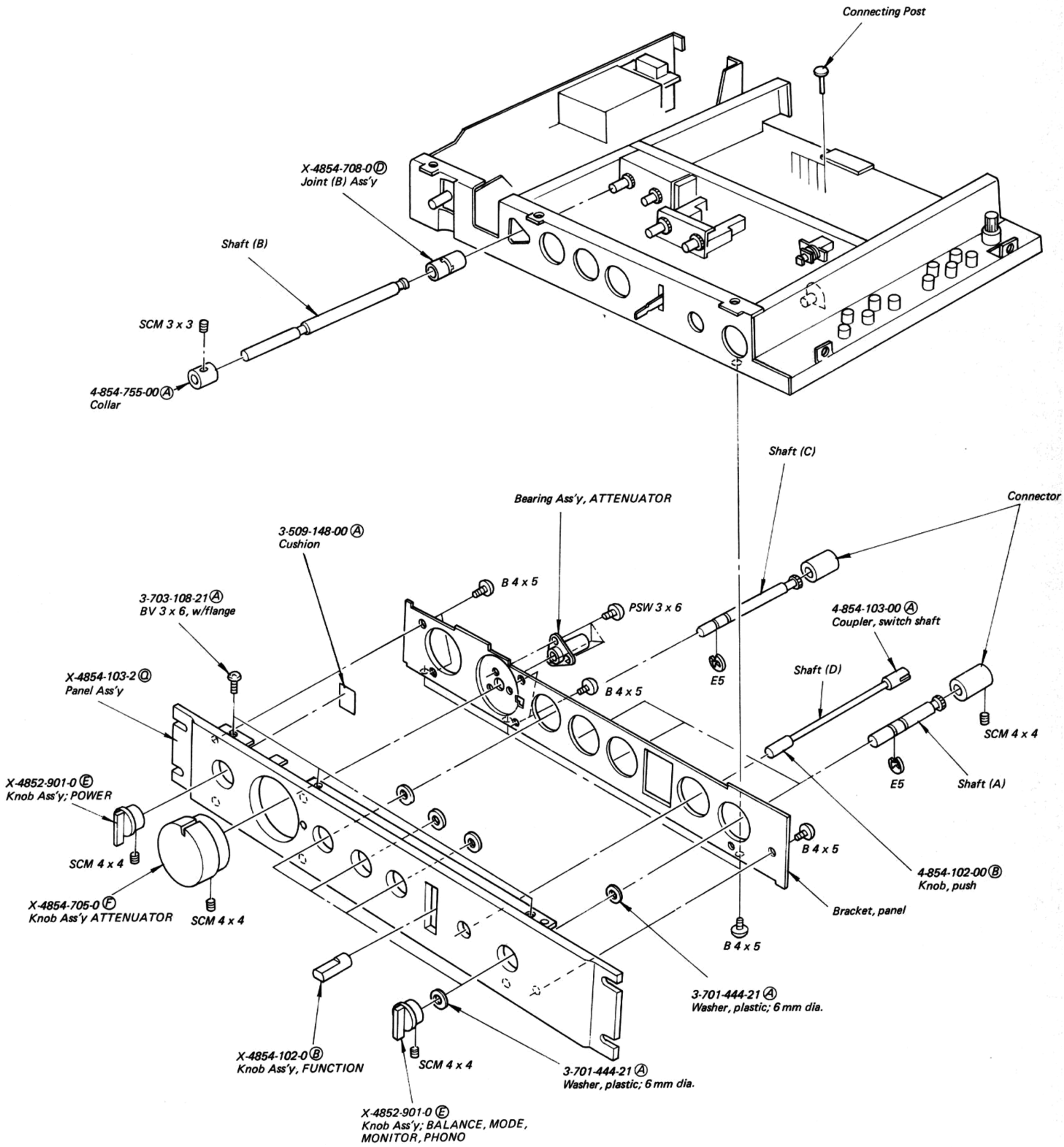

Note:

- Items with no part number and/or no description are not stocked because they are seldom required for routine service.
- All screws are Phillips (cross recess) type unless otherwise noted.
  (–) = slotted head

Note: Circled letters (Ⓐ to Ⓩ) are applicable to European models only.

A | B | C

1 | 2 | 3 | 4 | 5

5-3.

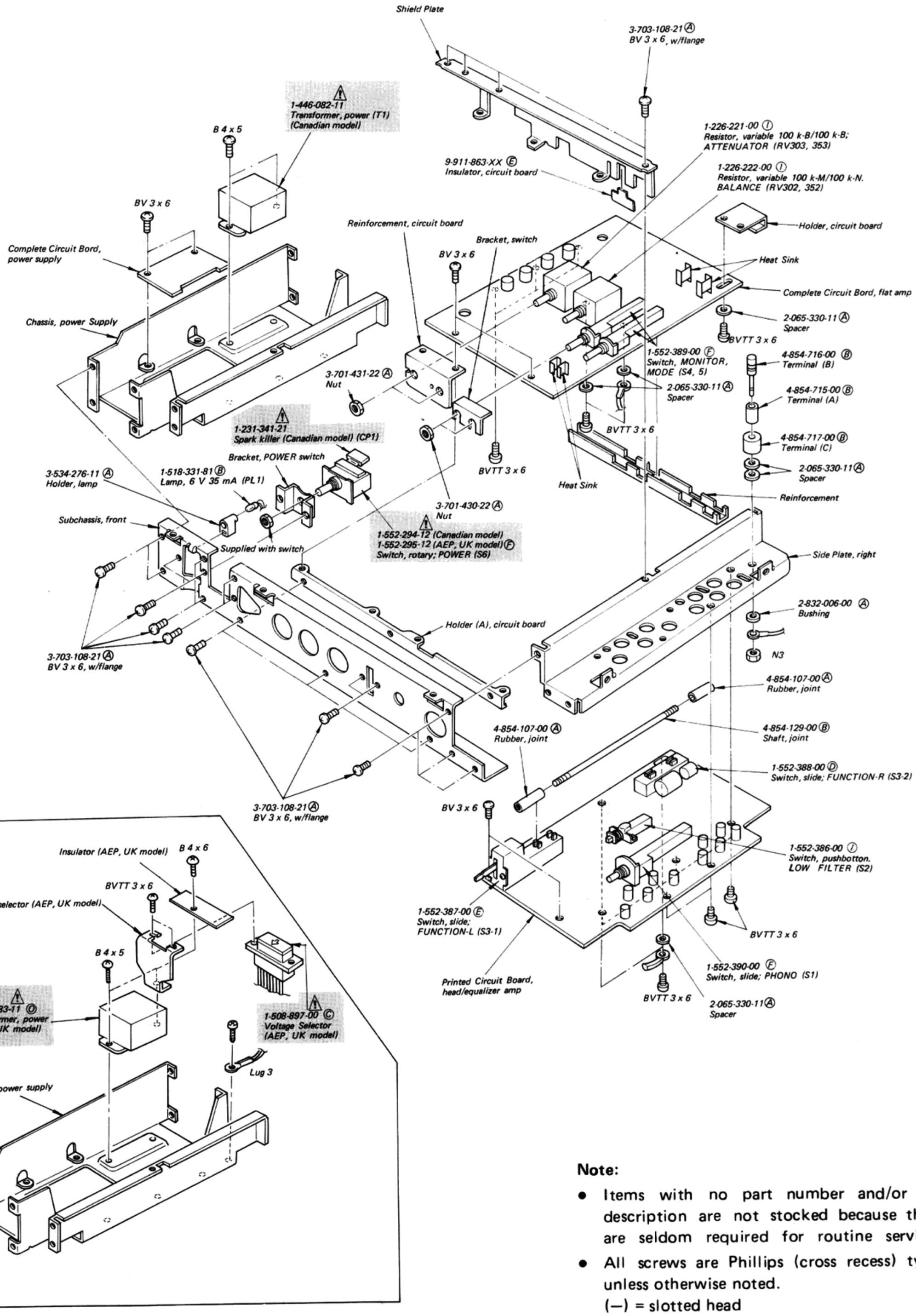

Note:

- Items with no part number and/or no description are not stocked because they are seldom required for routine service.
- All screws are Phillips (cross recess) type unless otherwise noted.
  (–) = slotted head

Note: The components identified by shading and mark ⚠ are critical for safety. Replace only with part number specified.

Note: Les composants identifiés par un tramé et une marque ⚠ sont critiques pour la sécurité. Ne les remplacer que par une pièce portant le numéro spécifié.

SECTION 6
ELECTRICAL PARTS LIST

Note: Circled letters (Ⓐ to Ⓩ) are applicable to European models only.

Ref. No.	Part No.	Description
		SEMICONDUCTORS
		Transistors
⇒Q101, 151, Q102, 152	8-765-493-00	Ⓒ 2SC2014
⇒Q103, 153, Q104, 154	8-729-387-28	Ⓑ 2SA872-E
⇒Q105, 155	8-729-377-58	Ⓑ 2SC1775-E
Q106, 156	8-729-990-43	Ⓑ 2SC1904
Q201, 251	8-765-342-31	Ⓕ 2SK97
Q202, 252, Q203, 253	8-729-334-58	Ⓑ 2SC1345
Q204, 254	8-729-203-04	Ⓑ 2SK30A
⇒Q205, 255	8-722-38340	Ⓑ 2SK23A-834
Q206, 256	8-729-334-58	Ⓑ 2SC1345
⇒Q207–210, Q257–260	8-729-387-28	Ⓑ 2SA872-E
⇒Q211, 261, Q212, 262	8-729-377-58	Ⓑ 2SC1775-E
Q213, 263	8-729-990-43	Ⓑ 2SC1904
⇒Q214, 264	8-765-082-20	Ⓒ 2SA896
Q301, 351	8-761-510-06	Ⓕ 2SK58
⇒Q302, 252, Q303, 353	8-729-334-58	Ⓑ 2SC1345
Q304, 354	8-729-203-04	Ⓑ 2SK30A
⇒Q305, 355	8-722-383-40	Ⓑ 2SK23A-834
⇒Q306, 356	8-729-334-58	Ⓑ 2SC1345
⇒Q307, 357, Q308, 358	8-727-788-00	Ⓑ 2SA678
⇒Q309, 359, Q310, 360	8-729-163-93	Ⓒ 2SA639S
⇒Q311, 361, Q312, 362	8-720-950-03	Ⓒ 2SC926A
Q313, 363	8-765-012-20	Ⓒ 2SC1811
Q314, 364	8-765-082-20	Ⓒ 2SA896
⇒Q401, 451	8-727-312-00	Ⓒ 2SK42-2
⇒Q402, 452	8-729-163-93	Ⓒ 2SA639S
Q403, 453	8-729-366-71	Ⓑ 2SD667
Q404, 454	8-729-364-71	Ⓑ 2SB647
⇒Q501	8-720-950-03	Ⓒ 2SC926A
⇒Q502	8-765-012-20	Ⓒ 2SC1811
Q601	8-729-203-04	Ⓒ 2SK30A
Q602	8-729-217-33	Ⓑ 2SC1173
Q603–605	8-729-334-58	Ⓒ 2SC1345
⇒Q606	8-722-383-40	Ⓑ 2SK23A-834
⇒Q607–609	8-729-387-28	Ⓑ 2SA872-E
Q610	8-729-203-04	Ⓑ 2SK30A
Q611	8-729-247-33	Ⓒ 2SA473
⇒Q612–615	8-729-387-28	Ⓒ 2SA872-E
⇒Q616	8-722-383-40	Ⓑ 2SK23A-834
Q617, 618	8-729-334-58	Ⓑ 2SC1345
Q619	8-729-203-04	Ⓑ 2SK30A
Q620	8-729-217-33	Ⓒ 2SC1173
⇒Q621–623	8-729-334-58	Ⓑ 2SC1345
⇒624	8-722-383-40	Ⓑ 2SK23A-834
⇒Q625, 626	8-727-788-00	Ⓑ 2SA678
Q627	8-729-203-04	Ⓑ 2SK30A
Q628	8-729-247-33	Ⓒ 2SA473
⇒Q629–631	8-727-788-00	Ⓑ 2SA678
⇒Q632, 633	8-729-334-58	Ⓑ 2SC1345
⇒Q634	8-722-383-40	Ⓑ 2SK23A-834
		Diodes
⇒D201, 251	8-719-931-10	Ⓑ EQB01-10
D202, 252	8-719-920-30	Ⓑ MV203 V
⇒D203, 253	8-719-931-20	Ⓑ EQB01-20
⇒D301, 351	8-719-931-10	Ⓑ EQB01-10
D302, 352	8-719-910-40	Ⓑ MV104 V
⇒D303, 353	8-719-931-20	Ⓑ EQB01-20
D401, 451	8-719-920-30	Ⓑ MV203 V
D501, 502	8-719-510-10	Ⓒ S1RB10
⇒D503	8-719-911-55	Ⓑ U05G
D504, 505	8-719-815-55	Ⓑ IS1555
⇒D506	8-719-911-55	Ⓑ U05G
⇒D601, 602	8-719-931-16	Ⓑ EQB01-16

⇒: Due to standardization, interchangeable replacements may be substituted for parts specified in the diagrams.

Note: Circled letters (Ⓐ to Ⓩ) are applicable to European models only.

CAPACITORS

All capasitors are in μF and ceramic unless otherwise noted. 50 WV or less are not indicated except for electrolytics and tantalum. pF = μμF, elect = electrolytic

Ref. No.	Part No.	Description			
C1	⚠1-108-777-12	Ⓒ 0.022	300 V	mylar (AEP. UK model)
C101, 151	1-102-074-11	Ⓐ 0.001		
C102, 151	1-131-429-11	Ⓕ 470	3.15 V	tantalum
C103, 153	1-130-127-11	Ⓑ 0.015	100 V	polyethylene
C104, 154	1-102-121-11	Ⓐ 0.0022		
C105, 155	1-131-449-11	Ⓒ 3.3	16 V	tantalum
C106, 156	1-121-943-11	Ⓑ 1000	10 V	elect
C107, 157 / C108, 158	1-131-449-11	Ⓒ 3.3	16 V	tantalum
C109, 159 / C110, 160	1-131-201-11	Ⓑ 22	16 V	tantalum
C111, 161	1-130-127-11	Ⓑ 0.015	100 V	polyethylene
C201, 251	1-102-971-11	Ⓐ 82 p		
C202, 252	1-102-074-11	Ⓐ 0.001		
C204, 254	1-130-145-11	Ⓑ 0.016	800 V	polyethylene
C206, 256	1-130-146-11	Ⓒ 0.056	800 V	polyethylene
C207, 257 / C208, 258	1-102-943-11	Ⓐ 6 p		
C209, 259 / C210, 260	1-131-450-11	Ⓒ 1	35 V	tantalum
C211, 261 / C212, 262	1-131-238-11	Ⓑ 10	25 V	tantalum
C213, 263	1-130-127-11	Ⓑ 0.015	100 V	polyethylene
C214, 264 / C215, 265	1-131-214-11	Ⓑ 0.68	35 V	tantalum
C216, 266	1-130-127-11	Ⓑ 0.015	100 V	polyethylene
C301, 351	1-102-963-11	Ⓐ 33 p		
C302, 352 / C303, 353	1-102-965-11	Ⓐ 39 p		
C304, 354 / C305, 355	1-131-450-11	Ⓒ 1	35 V	tantalum
C306, 356 / C307, 357	1-131-238-11	Ⓑ 10	25 V	tantalum
C308, 358	1-130-127-11	Ⓑ 0.015	100 V	polyethylene
C309, 359	1-121-391-11	Ⓐ 1	50 V	elect
C310, 360 / C311, 361	1-131-238-11	Ⓑ 10	25 V	tantalum
C402, 452 / C403, 453	1-131-213-11	Ⓑ 0.47	35 V	tantalum
C404, 454	1-131-215-11	Ⓑ 1	35 V	tantalum
C405, 455 / C406, 456	1-102-129-11	Ⓐ 0.01		
C407, 457	1-131-238-11	Ⓑ 10	25 V	tantalum
C408, 458 / C409, 459	1-121-396-11	Ⓐ 4.7	50 V	elect
C501, 502	1-123-066-11	Ⓑ 1000	25 V	elect
C503, 504	1-130-085-11	Ⓑ 0.22	100 V	polyethylene
C505, 506	1-123-393-11	Ⓔ 3300	42 V	elect
C507, 508	1-130-085-11	Ⓑ 0.22	100 V	poleythylene
C509	1-123-250-11	Ⓐ 2.2	100 V	elect
C510	1-123-183-11	Ⓐ 10	50 V	elect
C511	1-131-295-11	Ⓒ 100	6.3 V	tantalum
C601, 602	1-121-986-11	Ⓐ 2.2	50 V	elect
C603, 604	1-123-072-11	Ⓐ 220	10 V	elect
C605, 606	1-102-973-11	Ⓐ 100 p		
C607, 608	1-102-114-11	Ⓐ 470 p		
C609, 610	1-121-943-11	Ⓑ 1000	10 V	elect
C611, 612	1-131-449-11	Ⓒ 3.3	16 V	tantalum
C613, 614	1-121-986-11	Ⓐ 2.2	50 V	elect
C615, 616	1-123-068-11	Ⓑ 220	16 V	elect
C617, 618	1-102-114-11	Ⓐ 470p		
C619, 620	1-123-061-11	Ⓒ 1000	50 V	elect
C621, 622	1-131-450-11	Ⓒ 1	35 V	tantalum

Note: The components identified by shading and mark ⚠ are critical for safety. Replace only with part number specified.

Note: Les composants identifiés par un tramé et une marque ⚠ sont critiques pour la sécurité. Ne les remplacer que par une pièce portant le numéro spécifié.

Note: Circled letters (Ⓐ to Ⓩ) are applicable to European models only.

RESISTOR

All resistors are in ohms. Common ¼W carbon resistors are omitted. Refer to the list on page 26 for their resistance values. (kΩ = 1000 Ω, MΩ = 1000 kΩ)

Ref. No.	Part No.	Description			
R101, 151 R102, 152	1-244-857-11	Ⓐ 220	½W	carbon
R103, 153	1-244-843-11	Ⓐ 56	½W	carbon
R104, 154	1-244-863-11	Ⓐ 390	½W	carbon
R105, 155	1-244-861-11	Ⓐ 330	½W	carbon
R106, 156	1-244-857-11	Ⓐ 220	½W	carbon
R107, 157	1-244-849-11	Ⓐ 100	½W	carbon
R108, 158	1-244-859-11	Ⓐ 270	½W	carbon
R109, 159	1-244-849-11	Ⓐ 100	½W	carbon
R110, 160	1-212-364-11	Ⓐ 2.2	½W	carbon
R111, 161 R112, 162	1-214-092-11	Ⓐ 22	¼W	metal oxide
R113, 163	1-244-885-11	Ⓐ 3.3 k	½W	carbon
R114, 164	1-244-861-11	Ⓐ 330	½W	carbon
R115, 164	1-244-883-11	Ⓐ 2.7 k	½W	carbon
R116, 166	1-244-921-11	Ⓐ 100 k	½W	carbon
R117, 167	1-244-909-11	Ⓐ 33 k	½W	carbon
R118, 168	1-244-921-11	Ⓐ 100 k	½W	carbon
R201, 252	1-244-921-11	Ⓐ 100 k	½W	carbon
R202, 252	1-244-825-11	Ⓐ 10	½W	carbon
R203, 253 R204, 254	1-244-883-11	Ⓐ 2.7 k	½W	carbon
R205, 255	1-244-853-11	Ⓐ 150	½W	carbon
R206, 256 R207, 257	1-244-837-11	Ⓐ 33	½W	carbon
R209, 259	1-244-875-11	Ⓐ 1.2 k	½W	carbon
R210, 260	1-244-856-11	Ⓐ 200	½W	carbon
R211, 261	1-244-913-11	Ⓐ 47 k	½W	carbon
R212, 262	1-214-108-11	Ⓐ 100	¼W	metal oxide
R213, 263	1-214-157-11	Ⓐ 11 k	¼W	metal oxide
R214, 264	1-214-154-11	Ⓐ 8.2 k	¼W	metal oxide
R215, 265	1-214-130-11	Ⓐ 820	¼W	metal oxide
R216, 266	1-214-174-11	Ⓐ 56 k	¼W	metal oxide
R217, 267	1-244-890-11	Ⓐ 5.1 k	½W	carbon
R218, 268	1-244-905-11	Ⓐ 22 k	½W	carbon
R219, 269	1-244-879-11	Ⓐ 1.8 k	½W	carbon
R220, 270 R221, 271	1-244-849-11	Ⓐ 100	½W	carbon
R222, 272 R223, 273	1-244-889-11	Ⓐ 4.7 k	½W	carbon
R224, 274	1-244-865-11	Ⓐ 470	½W	carbon
R225, 275 R226, 276	1-214-100-11	Ⓐ 47	¼W	metal oxide
R227, 277	1-244-921-11	Ⓐ 100 k	½W	carbon
R228, 278	1-244-863-11	Ⓐ 390	½W	carbon
R229, 279	1-244-913-11	Ⓐ 47 k	½W	carbon
R301, 351	1-244-941-11	Ⓐ 680 k	½W	carbon
R302, 352	1-214-108-11	Ⓐ 100	¼W	metal oxide
R303, 353 R304, 354	1-244-897-11	Ⓐ 10 k	½W	carbon
R305, 255 R306, 356	1-244-845-11	Ⓐ 68	½W	carbon
R308, 358	1-244-885-11	Ⓐ 3.3 k	½W	carbon
R309, 359	1-244-869-11	Ⓐ 680	½W	carbon
R310, 360	1-244-913-11	Ⓐ 4.7 k	½W	carbon
R311, 361	1-214-124-11	Ⓐ 470	¼W	metal oxide
R312, 362	1-214-140-11	Ⓐ 2.2 k	¼W	metal oxide
R313, 363	1-214-139-11	Ⓐ 2 k	¼W	metal oxide
R316, 366	1-244-905-11	Ⓐ 22 k	½W	carbon
R317, 367	1-244-891-11	Ⓐ 5.6 k	½W	carbon
R318, 368	1-244-879-11	Ⓐ 1.8 k	½W	carbon
R319, 369 R320, 370	1-244-873-11	Ⓐ 1 k	½W	carbon
R321, 371 R322, 372	1-244-889-11	Ⓐ 4.7 k	½W	carbon
R323, 373	1-244-849-11	Ⓐ 100	½W	carbon
R324, 374 R325, 375	1-214-112-11	Ⓐ 150	¼W	metal oxide
R326, 376	1-214-108-11	Ⓐ 100	¼W	metal oxide
R327, 377	1-244-897-11	Ⓐ 10 k	½W	carbon
R401, 451	1-244-921-11	Ⓐ 100 k	½W	carbon
R402, 452	1-244-897-11	Ⓐ 10 k	½W	carbon

Note: Circled letters (Ⓐ to Ⓩ) are applicable to European models only.

Ref. No.	Part No.	Description			
R404, 454	1-244-897-11	Ⓐ	10 k	½ W	carbon
R405, 455 R406, 456	1-244-885-11	Ⓐ	3.3 k	½ W	carbon
R407, 457	1-244-897-11	Ⓐ	10 k	½ W	carbon
R408, 458	1-244-875-11	Ⓐ	1.2 k	½ W	carbon
R409, 459	1-244-895-11	Ⓐ	8.2 k	½ W	carbon
R410, 460	1-244-897-11	Ⓐ	10 k	½ W	carbon
R411, 451 R412, 462	1-214-108-11	Ⓐ	100	¼ W	metal oxide
R413, 463	1-244-849-11	Ⓐ	100	½ W	carbon
R414, 464	1-244-929-11	Ⓐ	220 k	½ W	carbon
R506	1-244-882-11	Ⓐ	2.4 k	½ W	carbon
R507	1-246-530-11	Ⓐ	240 k		
R601	1-244-857-11	Ⓐ	220	½ W	carbon
R602	1-244-875-11	Ⓐ	1.2 k	½ W	carbon
R603	1-244-857-11	Ⓐ	220	½ W	carbon
R604	1-244-875-11	Ⓐ	1.2 k	½ W	carbon
R605, 606	1-244-877-11	Ⓐ	1.5 k	½ W	carbon
R607, 608	1-244-875-11	Ⓐ	1.2 k	½ W	carbon
R609, 610	1-214-139-11	Ⓐ	2.0 k	¼ W	metal oxide
R611, 612	1-214-140-11	Ⓐ	2.2 k	¼ W	metal oxide
R613, 614	1-244-875-11	Ⓐ	1.2 k	½ W	carbon
R615, 616	1-244-893-11	Ⓐ	6.8 k	½ W	carbon
R617, 618	1-214-140-11	Ⓐ	2.2 k	¼ W	metal oxide
R619, 620	1-214-142-11	Ⓐ	2.7 k	¼ W	metal oxide
RV201, 251	1-224-550-21	Ⓑ	220 k-B, adjustable; OFFSET		
RV302, 352	1-225-222-00	Ⓘ	100 k-M/100 k-N, variable BALANCE		
RV303, 353	1-226-221-00	Ⓘ	100 k-B/100 k-B , variable; ATTENUATOR		

SWITCHES

Ref. No.	Part No.	Description	
S1	1-552-390-00	Ⓕ	Slide, PHONO
S2	1-552-386-00	Ⓘ	Pushbutton, LOW FILTER
S3-1	1-552-387-00	Ⓔ	Lever-Slide, FUNCTION (L)
S3-2	1-552-388-00	Ⓓ	Slide, FUNCTION (R)
S4, 5	1-552-389-00	Ⓕ	Rotary, MONITOR, MODE
S6	**⚠1-552-294-12**		**Rotary, POWER (Canadian model)**
S6	**⚠1-552-295-00**	**Ⓖ**	**Rotary, POWER (AEP, UK model)**

MISCELLANEOUS

Ref. No.	Part No.	Description	
CNJ1–3	**⚠1-526-528-00**		**AC Outlet (Canadian model)**
CNJ1	**⚠1-509-546-00**	**Ⓒ**	**AC Input Connector 3 p, (AEP, UK model)**
CNP1	**⚠1-551-511-00**		**Cord, power (Canadian model)**
CP1	**⚠1-231-341-00**		**Spark killer (Canadian model)**
J101–105 J151–155	1-507-567-00	Ⓑ	Jack, phono 1 P; PHONO TUNER, AUX, TAPE, REC OUT
J106, 156 J107, 157	1-507-567-12	Ⓑ	Jack, 1 P; OUTPUT 1, 2
PL1	1-518-331-81	Ⓑ	Lamp, 6 V 35 mA
RY301, 351	1-515-294-21	Ⓕ	Relay
F1	**⚠1-532-078-00**	**Ⓑ**	**Fuse, T1A (AEP, UK model)**
T1	**⚠1-446-082-11**		**Transformer, power (Canadian model)**
T1	**⚠1-446-083-11**	**Ⓞ**	**Transformer, power (AEP, UK model)**
	⚠1-508-897-00	**Ⓒ**	**Voltage Selector (AEP, UK model)**
	⚠1-533-131-00	**Ⓐ**	**Holder, fuse (AEP, UK model)**

Note: The components identified by shading and mark ⚠ are critical for safety. Replace only with part number specified.

Note: Les composants identifiés par un tramé et une marque ⚠ sont critiques pour la sécurité. Ne les remplacer que par une pièce portant le numéro spécifié.

Note: Circled letters (Ⓐ to Ⓩ) are applicable to European models only.

ACCESSORIES AND PACKING MATERIALS

Part No.	*Description*
⚠1-534-819-00 Ⓖ	**Cord, power (UK model)**
1-551-315-00 Ⓗ	Cord, connection; RK-112
3-701-020-00 Ⓐ	Bag, check sheet
3-701-622-01 Ⓐ	Bag, polyethylene (Canadian, UK model)
3-770-362-11	Manual, instruction (AEP, UK model)
3-770-362-21	Manual, instruction (Canadian model)
3-794-302-31	Leaflet, instruction (Canadian model)
4-809-251-00 Ⓐ	Bag, protection
4-852-949-00 Ⓒ	Cushion
4-854-140-00 Ⓔ	Carton

Note: The components identified by shading and mark ⚠ are critical for safety. Replace only with part number specified.

Note: Les composants identifiés par un tramé et une marque ⚠ sont critiques pour la sécurité. Ne les remplacer que par une pièce portant le numéro spécifié.

1/4 WATT CARBON RESISTORS Ⓐ

Note: Circled letter Ⓐ is applicable to European models only.

Ω	Part No.	Ω	Part No.	Ω	Part No.	Ω	Part No.	Ω	Part No.	Ω	Part No.	Ω	Part No.
1.0	1-244-601-11	10	1-244-625-11	100	1-244-649-11	1.0k	1-244-673-11	10k	1-244-697-11	100k	1-244-721-11	1.0M	1-244-745-11
1.1	1-244-602-11	11	1-244-626-11	110	1-244-650-11	1.1k	1-244-674-11	11k	1-244-698-11	110k	1-244-722-11	1.1M	1-244-746-11
1.2	1-244-603-11	12	1-244-627-11	120	1-244-651-11	1.2k	1-244-675-11	12k	1-244-699-11	120k	1-244-723-11	1.2M	1-244-747-11
1.3	1-244-604-11	13	1-244-628-11	130	1-244-652-11	1.3k	1-244-676-11	13k	1-244-700-11	130k	1-244-724-11	1.3M	1-244-748-11
1.5	1-244-605-11	15	1-244-629-11	150	1-244-653-11	1.5k	1-244-677-11	15k	1-244-701-11	150k	1-244-725-11	1.5M	1-244-749-11
1.6	1-244-606-11	16	1-244-630-11	160	1-244-654-11	1.6k	1-244-678-11	16k	1-244-702-11	160k	1-244-726-11	1.6M	1-244-750-11
1.8	1-244-607-11	18	1-244-631-11	180	1-244-655-11	1.8k	1-244-679-11	18k	1-244-703-11	180k	1-244-737-11	1.8M	1-244-751-11
2.0	1-244-608-11	20	1-244-632-11	200	1-244-656-11	2.0k	1-244-680-11	20k	1-244-704-11	200k	1-244-728-11	2.0M	1-244-752-11
2.2	1-244-609-11	22	1-244-633-11	220	1-244-657-11	2.2k	1-244-681-11	22k	1-244-705-11	220k	1-244-729-11	2.2M	1-244-753-11
2.4	1-244-610-11	24	1-244-634-11	240	1-244-658-11	2.4k	1-244-682-11	24k	1-244-706-11	240k	1-244-730-11	2.4M	1-244-754-11
2.7	1-244-611-11	27	1-244-635-11	270	1-244-659-11	2.7k	1-244-683-11	27k	1-244-707-11	270k	1-244-731-11	2.7M	1-244-755-11
3.0	1-244-612-11	30	1-244-636-11	300	1-244-660-11	3.0k	1-244-684-11	30k	1-244-708-11	300k	1-244-732-11	3.0M	1-244-756-11
3.3	1-244-613-11	33	1-244-637-11	330	1-244-661-11	3.3k	1-244-685-11	33k	1-244-709-11	330k	1-244-733-11	3.3M	1-244-757-11
3.6	1-244-614-11	36	1-244-638-11	360	1-244-662-11	3.6k	1-244-686-11	36k	1-244-710-11	360k	1-244-734-11	3.6M	1-244-758-11
3.9	1-244-615-11	39	1-244-639-11	390	1-244-663-11	3.9k	1-244-687-11	39k	1-244-711-11	390k	1-244-735-11	3.9M	1-244-759-11
4.3	1-244-616-11	43	1-244-640-11	430	1-244-664-11	4.3k	1-244-688-11	43k	1-244-712-11	430k	1-244-736-11	4.3M	1-244-760-11
4.7	1-244-617-11	47	1-244-641-11	470	1-244-665-11	4.7k	1-244-689-11	47k	1-244-713-11	470k	1-244-737-11	4.7M	1-244-761-11
5.1	1-244-618-11	51	1-244-642-11	510	1-244-666-11	5.1k	1-244-690-11	51k	1-244-714-11	510k	1-244-738-11	5.1M	1-244-762-11
5.6	1-244-619-11	56	1-244-643-11	560	1-244-667-11	5.6k	1-244-691-11	56k	1-244-715-11	560k	1-244-739-11		
6.2	1-244-620-11	62	1-244-644-11	620	1-244-668-11	6.2k	1-244-692-11	62k	1-244-716-11	620k	1-244-740-11		
6.8	1-244-621-11	68	1-244-645-11	680	1-244-669-11	6.8k	1-244-693-11	68k	1-244-717-11	680k	1-244-741-11		
7.5	1-244-622-11	75	1-244-646-11	750	1-244-670-11	7.5k	1-244-694-11	75k	1-244-718-11	750k	1-244-742-11		
8.2	1-244-623-11	82	1-244-647-11	820	1-244-671-11	8.2k	1-244-695-11	82k	1-244-719-11	820k	1-244-743-11		
9.1	1-244-624-11	91	1-244-648-11	910	1-244-672-11	9.1k	1-244-696-11	91k	1-244-720-11	910k	1-244-744-11		

HARDWARE NOMENCLATURE

Screw: – P 3 x 10

- *L: Length in mm*
- *D: Diameter in mm*
- *Type of head*
- *Indicated slotted-head only. Unless otherwise indicated, it means cross-recessed head (Phillips type).*

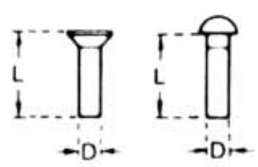

Nut, Washer, Retaining ring: N 3

- *Diameter of usable screw or shaft*
- *Reference designation*

Reference Designation	Shape	Description	Remarks
		SCREWS	
P		pan-head screw	binding-head (B) screw for replacement
PWH		pan-head screw with washer face	binding-head (B) screw and flat washer for replacement
PS PSP		pan-head screw with spring washer	binding-head (B) screw and spring washer for replacement
PSW PSPW		pan-head screw with spring and flat washers	binding-head (B) screw and spring and flat washers for replacement
R		round-head screw	binding-head (B) screw for replacement
K		flat-countersunk-head screw	
RK		oval-countersunk-head screw	
B		binding-head screw	
T		truss-head screw	binding-head (B) screw for replacement
F		flat-fillister-head screw	
RF		fillister-head screw	
BV		braizer-head screw	

Reference Designation	Shape	Description	Remarks
		SELF-TAPPING SCREWS	
TA		self-tapping screw	ex: TA, P 3 x 10
PTP		pan-head self-tapping screw	binding-head self-tapping (TA, B) screw for replacement
PTPWH		pan-head self-tapping screw with washer face	binding-head self tapping (TA, B) screw and flat washer for replacement
PTTWH		pan-head thread-rolling screw with washer face	binding-head (B) screw and flat washer for replacement
		SET SCREWS	
SC		set screw	
SC		hexagon-socket set screw	ex: SC 2.6 x 4, hexagon socket
		NUT	
N		nut	
		WASHERS	
W		flat washer	
SW		spring washer	
LW		internal-tooth lock washer	ex: LW3, internal
LW		external-tooth lock washer	ex: LW3, external
		RETAINING RINGS	
E		retaining ring	
G		grip-type retaining ring	

Sony Corporation

9-958-470-11

78G0580-1
Printed in Japan