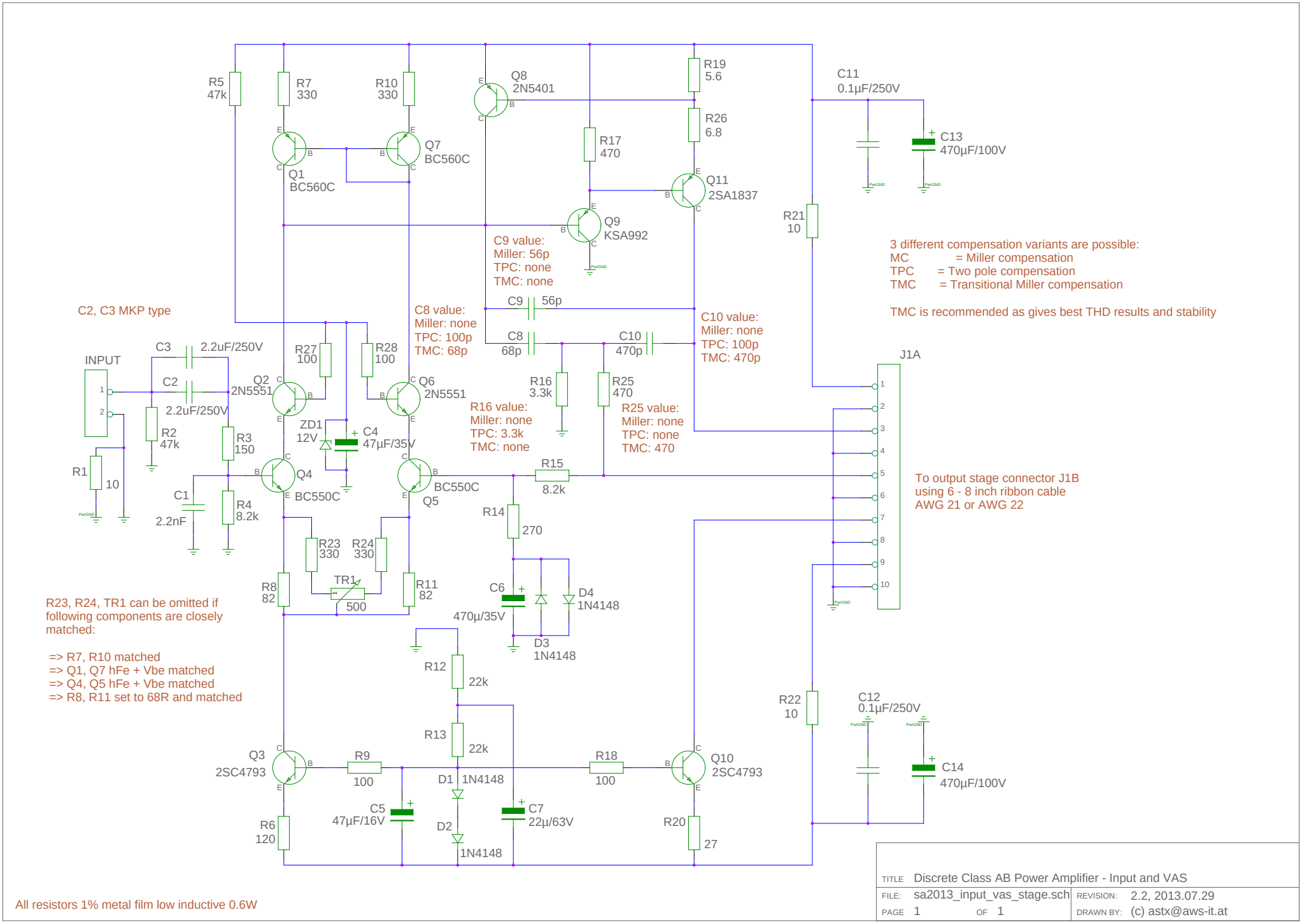
R5 47k
R7 330
R10 330
Q8 2N5401
R19 5.6
C11 0.1µF/250V
R26 6.8
C13 470µF/100V
Q1 BC560C
Q7 BC560C
R17 470
Q11 2SA1837
Q9 KSA992
R21 10
C9 value:
Miller: 56p
TPC: none
TMC: none
3 different compensation variants are possible:
MC = Miller compensation
TPC = Two pole compensation
TMC = Transitional Miller compensation
TMC is recommended as gives best THD results and stability
C2, C3 MKP type
C9 56p
C8 value:
Miller: none
TPC: 100p
TMC: 68p
C10 value:
Miller: none
TPC: 100p
TMC: 470p
INPUT
C3 2.2uF/250V
C2 2.2uF/250V
R27 100
R28 100
C8 68p
C10 470p
J1A
Q2 2N5551
Q6 2N5551
R16 3.3k
R25 470
R16 value:
Miller: none
TPC: 3.3k
TMC: none
R25 value:
Miller: none
TPC: none
TMC: 470
R2 47k
R3 150
ZD1 12V
C4 47µF/35V
R1 10
Q4 BC550C
Q5 BC550C
R15 8.2k
To output stage connector J1B
using 6 - 8 inch ribbon cable
AWG 21 or AWG 22
C1 2.2nF
R4 8.2k
R14 270
R23 330
R24 330
R8 82
TR1 500
R11 82
C6 470µ/35V
D4 1N4148
D3 1N4148
R23, R24, TR1 can be omitted if following components are closely matched:
=> R7, R10 matched
=> Q1, Q7 hFe + Vbe matched
=> Q4, Q5 hFe + Vbe matched
=> R8, R11 set to 68R and matched
R12 22k
R22 10
C12 0.1µF/250V
R13 22k
Q3 2SC4793
R9 100
D1 1N4148
R18 100
Q10 2SC4793
C14 470µF/100V
C5 47µF/16V
C7 22µ/63V
R6 120
D2 1N4148
R20 27
All resistors 1% metal film low inductive 0.6W
TITLE Discrete Class AB Power Amplifier - Input and VAS
FILE: sa2013_input_vas_stage.sch
REVISION: 2.2, 2013.07.29
PAGE 1 OF 1
DRAWN BY: (c) astx@aws-it.at