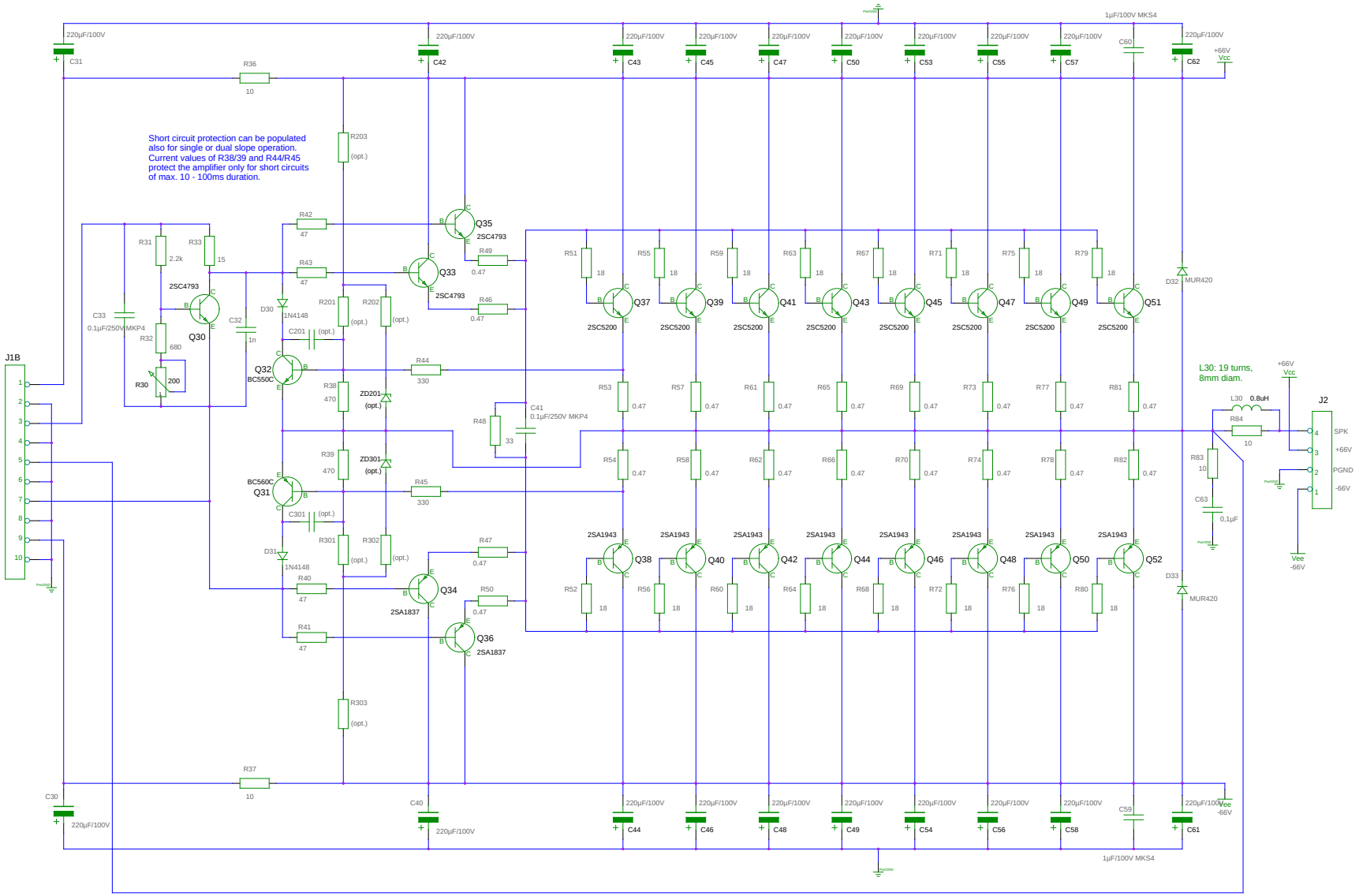

TITLE Discrete Class AB Power Amplifier - Bias and power stage

FILE: my_discrete_class_ab_2.sch

REVISION: 2.0, 2013.05.26

PAGE 1 OF 1

DRAWN BY: (c) astx@aws-it.at