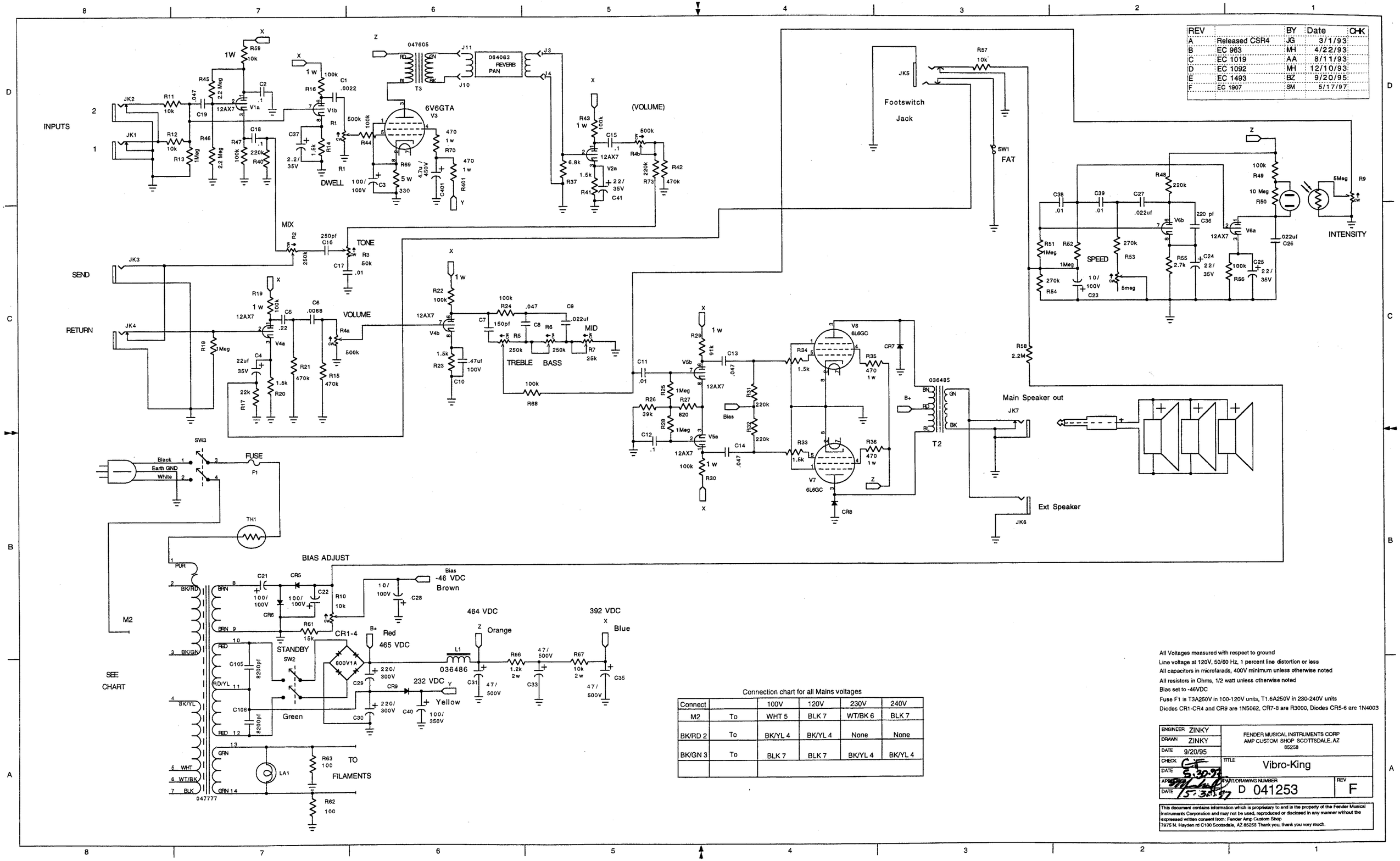

REV		BY	Date	CHK
A	Released CSR4	JG	3/1/93	
B	EC 963	MH	4/22/93	
C	EC 1019	AA	8/11/93	
D	EC 1092	MH	12/10/93	
E	EC 1493	BZ	9/20/95	
F	EC 1907	SM	5/17/97	

Connection chart for all Mains voltages

Connect		100V	120V	230V	240V
M2	To	WHT 5	BLK 7	WT/BK 6	BLK 7
BK/RD 2	To	BK/YL 4	BK/YL 4	None	None
BK/GN 3	To	BLK 7	BLK 7	BK/YL 4	BK/YL 4

All Voltages measured with respect to ground
Line voltage at 120V, 50/60 Hz, 1 percent line distortion or less
All capacitors in microfarads, 400V minimum unless otherwise noted
All resistors in Ohms, 1/2 watt unless otherwise noted
Bias set to -46VDC
Fuse F1 is T3A250V in 100-120V units, T1.6A250V in 230-240V units
Diodes CR1-CR4 and CR9 are 1N5062, CR7-8 are R3000, Diodes CR5-6 are 1N4003

ENGINEER ZINKY	FENDER MUSICAL INSTRUMENTS CORP AMP CUSTOM SHOP SCOTTSDALE, AZ 85258
DRAWN ZINKY	
DATE 9/20/95	
CHECK	TITLE Vibro-King
DATE 5.30.97	
APPROVED	PART/DRAWING NUMBER D 041253 — REV F
DATE 5.30.97	

This document contains information which is proprietary to and is the property of the Fender Musical Instruments Corporation and may not be used, reproduced or disclosed in any manner without the expressed written consent from: Fender Amp Custom Shop 7975 N. Hayden rd C100 Scottsdale, AZ 85258 Thank you, thank you very much.